CONSTRUCTION DOCUMENT NOTES

BUILDINGS SHALL BE CONSTRUCTED IN ACCORDANCE WITH THE PROVISIONS OF THE 2015 INTERNATIONAL RESIDENTIAL CODE AND/OR LOCAL COUNTY BUILDING CODE (BUILDING CODE TO TAKE PRECEDENCE OVER ANY NOTES IN THESE PLANS)
THESE PLANS ARE TO BE VERIFIED BY A STRUCTURAL ENGINEER
ENGINEER'S DRAWINGS SHALL TAKE PRECEDENCE OVER ANY NOTES IN THESE PLANS
MANUFACTURER'S INSTALLATION INSTRUCTIONS SHALL TAKE PRECEDENCE OVER ANY NOTES IN THESE PLANS

BUILDING PLANNING NOTES

SITE ADDRESS SHALL BE PROVIDED IN A POSITION THAT IS PLAINLY VISIBLE AND LEGIBLE FROM STREET FRONTING THE PROPERTY
CONSTRUCTION, PROJECTIONS, OPENINGS AND PENETRATION OF EXTERIOR WALLS SHALL COMPLY w/ TABLE R302.1(1) - REVIEW FIRE RESISTANT CONSTRUCTION IF LESS THAN 5' SEPARATION BETWEEN STRUCTURES
ALL HABITABLE ROOMS SHALL HAVE EXTERIOR GLAZING NOT LESS THAN 8% OF THEIR FLOOR AREA TO PROVIDE NATURAL LIGHT, OR THEY SHALL BE PROVIDED WITH ARTIFICIAL LIGHT
ALL HABITABLE ROOMS SHALL BE PROVIDED WITH NATURAL VENTILATION THROUGH OPENINGS TO THE OUTDOOR AIR IN ACCORDANCE WITH SECTION R303, OR THEY SHALL BE PROVIDED WITH MECHANICAL VENTILATION
LIGHT & VENTILATION FOR BATHROOMS, WCs AND SIMILAR ROOMS SHALL COMPLY WITH SECTION R303.3
OUTDOOR AIR INTAKE OPENINGS SHALL BE LOCATED AT LEAST 10' FROM ANY HAZARDOUS OR NOXIOUS CONTAMINANT
OUTSIDE EXHAUST OPENINGS SHALL BE LOCATED SO AS TO NOT CREATE A NUISANCE AND SHALL NOT BE DIRECTED ONTO WALKWAYS NOR PORCHES
DWELLING SHALL BE PROVIDED WITH HEATING FACILITIES THAT WILL MAINTAIN A TEMPERATURE OF 68°F AT 3' ABOVE THE FLOOR AND 2' FROM EXTERIOR WALLS IN ALL HABITABLE ROOMS
THE MIN. CEILING HEIGHT FOR HABITABLE ROOMS, HALLWAYS, CORRIDORS, BATHROOMS, WCs, LAUNDRY ROOMS & BASEMENTS SHALL NOT BE LESS THAN 7'
SANITATION, TOILET, BATH & SHOWER SPACES PER SECTIONS R306 & R307 - 21" CLEARANCE IN FRONT OF FIXTURES
SAFETY GLAZING SHALL BE IN ACCORDANCE WITH SECTION R308
PERMITTED OPENINGS BETWEEN THE GARAGE AND THE DWELLING SHALL BE EQUIPPED WITH 1 3/4" THICK SOLID WOOD DOORS, HONEYCOMB CORE STEEL DOORS, OR 20 MINUTE FIRE-RATED DOORS
ANY GARAGE SHALL BE SEPARATED FROM THE DWELLING & ATTIC AREA IN ACCORDANCE WITH SECTION R304
GARAGE FLOOR SURFACES SHALL BE SLOPED TO A DRAIN TOWARD THE VEHICLE ENTRY POINT
EVERY SLEEPING ROOM SHALL HAVE OPERABLE EMERGENCY ESCAPE AND RESCUE OPENINGS PER SECTION R311
ALL EMERGENCY AND RESCUE OPENINGS SHALL HAVE A MIN. CLEAR OPENING OF 5.7sqft WITH A MIN. NET CLEAR OPENING HEIGHT OF 24" AND WIDTH OF 20" - NO HIGHER THAN 44" AFF
STAIRWAYS SHALL HAVE A MIN. HEADROOM HEIGHT OF 80"
STAIRWAYS SHALL HAVE A MINIMUM CLEAR WIDTH OF 31 1/2" AT AND BELOW THE HANDRAIL WHERE ONLY ONE HANDRAIL IS PROVIDED OR 27" WHERE HANDRAILS ARE PROVIDED ON BOTH SIDES
A FLIGHT OF STAIRS SHALL HAVE NO MORE THAN 147" OF VERTICAL RISE BETWEEN FLOORS OR LANDINGS
STAIRWELLS TREADS SHALL BE AT LEAST 10" DEEP AND SHALL NOT EXCEED MORE THAN 3/8" VARIATION FROM LARGEST TO SMALLEST TREAD; RISERS SHALL BE NOT GREATER THAN 7-3/4" IN HEIGHT AND SHALL NOT EXCEED 3/8" IN ANY FLIGHT OF STAIRS - SEE R311.7
A CONTINUOUS HANDRAIL SHALL BE PROVIDED ON AT LEAST ONE SIDE OF THE STAIRWAY - THE TOP OF THE HANDRAILS SHALL BE PLACED NOT LESS THAN 34" AND NOT MORE THAN 38" ABOVE THE NOSING OF THE TREADS
GUARDS AT LEAST 36" IN HEIGHT SHALL BE PROVIDED WHERE PORCHES, BALCONIES OR RAISED FLOOR SURFACES ARE GREATER THAN 30" - GUARDS SHALL NOT HAVE OPENINGS THAT ALLOW PASSAGE OF A SPHERE 4" IN DIAMETER
SMOKE ALARMS SHALL BE INSTALLED PER SECTION R314 IN THE FOLLOWING LOCATIONS:
- IN EACH SLEEPING ROOM
- OUTSIDE EACH SEPARATE SLEEPING AREA IN THE IMMEDIATE VICINITY OF THE BEDROOMS
- ON EACH ADDITIONAL STORY OF THE DWELLING, INCLUDING BASEMENTS AND HABITABLE ATTICS, BUT BUT NOT INCLUDING CRAWL SPACES AND UNINHABITABLE ATTICS
- SMOKE ALARMS SHALL BE INTERCONNECTED AS INDICATED IN SECTION R314.4
- THE POWER SOURCE FOR SMOKE ALARMS SHALL COMPLY WITH SECTION R314.6

PROTECTION OF WOOD FROM DECAY SHALL BE PROVIDED IN THE FOLLOWING LOCATIONS BY THE USE OF NATURALLY DURABLE WOOD OR WOOD THAT IS PRESERVATIVE-TREATED:
- WOOD JOISTS OR FLOORS LESS THAN 18" OR WOOD GIRDERS LESS THAN 12" FROM EXPOSED GROUND IN CRAWL SPACES OR UNEXCAVATED AREAS WITHIN THE BUILDING FOUNDATION
- FLOOR FRAMING MEMBERS THAT REST ON CONCRETE OR MASONRY EXTERIOR WALLS AND ARE LESS THAN 8" FROM EXPOSED GROUND
- SILLS AND SLEEPERS ON A CONCRETE OR MASONRY SLAB UNLESS SEPARATED BY SUCH A SLAB BY AN IMPERVIOUS MOISTURE BARRIER
- WOOD SIDING, SHEATHING AND WALL FRAMING ON THE EXTERIOR OF A BUILDING LESS THAN 6" FROM THE GROUND

AREAS SUBJECT TO TERMITE INFESTATION SHALL COMPLY WITH SECTION R318
A ROUGH-FRAMED OPENING NOT LESS THAN 22"x30" w/30" MIN. HEADROOM SHALL BE PROVIDED TO ATTIC AREAS THAT HAVE A VERTICAL HEIGHT OF 30" OR GREATER (MEASURED TO THE BOTTOM OF ROOF FRAMING MEMBERS) OVER AN AREA GREATER THAN 30SQFT
MECHANICAL EQUIPMENT IN ATTICS SHALL BE PROVIDED WITH ACCESS PER SECTION M1305.1.3

FLOOR JOIST SPAN REFERENCE

R502.3.1(2) - SOUTHERN PINE #2
40psf LIVE LOAD - 20psf DEAD LOAD
L/360 DEFLECTION

SIZE	SPACING	SPAN
2 x 6	12" o/c	9' - 10"
	16" o/c	8' - 6"
	19.2" o/c	7' - 9"
2 x 8	12" o/c	12' - 6"
	16" o/c	10' - 10"
	19.2" o/c	9' - 10"
2 x 10	12" o/c	14' - 9"
	16" o/c	12' - 10"
	19.2" o/c	11' - 8"
2 x 12	12" o/c	17' - 5"
	16" o/c	15' - 1"
	19.2" o/c	13' - 9"

*SPANS OVER 17' - 5" = ENGINEERED TRUSS or I-JOIST

WINDOW, DOOR & GARAGE DOOR HEADER SELECTION TABLE

SOUTHERN PINE #2 SUPPORTING ROOF,
WALL AND FLOOR LOADS UP TO 40psf

CLEAR OPENING	MIN. HEADER SIZE
4' - 0	(2) 2 x 10
6' - 0"	(3) 2 x 12
8' - 0"	3-1/2" x 9-1/2"
10' - 0"	3-1/2" x 11-7/8"
12' - 0"	5-1/2" x 11-7/8"
16' - 0"	5-1/2" x 16"
OVER 16'	ENGINEERED

WALL & HEADER STUD SELECTION TABLE

IRC TABLE 3.22F SOUTHERN PINE #2		MAX HEADER SPAN					
		3	5	9	12	15	18
		NUMBER OF JACK STUDS					
		1	1	2	2	2	2
UNSUPPORTED WALL HEIGHT	STUD SPACING	NUMBER OF KING STUDS (END OF HEADER)					
10' OR LESS	12" o/c	2	2	3	3	3	3
	16" o/c	2	2	3	3	3	3
GREATER THAN 10'	12" o/c	2	2	3	4	5	5
	16" o/c	2	2	3	3	4	4

CEILING JOIST SPAN REFERENCE

R802.4.(2) - SOUTHERN PINE #2
20psf LIVE LOAD - 10psf DEAD LOAD
LIMITED STORAGE - L/240 DEFLECTION

SIZE	SPACING	SPAN
2 x 4	12" o/c	9' - 3"
	16" o/c	8' - 0"
	19.2" o/c	7' - 4"
2 x 6	12" o/c	13' - 11"
	16" o/c	12' - 0"
	19.2" o/c	11' - 0"
2 x 8	12" o/c	17' - 7"
	16" o/c	15' - 3"
	19.2" o/c	13' - 11"
2 x 10	12" o/c	20' - 11"
	16" o/c	18' - 1"
	19.2" o/c	16' - 6"

ROOF RAFTER SPAN REFERENCE

R802.5.1(2) - SOUTHERN PINE #2
20psf LIVE LOAD - L/240 DEFLECTION
CEILING ATTACHED TO RAFTERS

SIZE	SPACING	SPAN
2 x 6	12" o/c	13' - 6"
	16" o/c	11' - 8"
	19.2" o/c	10' - 8"
2 x 8	12" o/c	17' - 1"
	16" o/c	14' - 9"
	19.2" o/c	13' - 6"
2 x 10	12" o/c	20' - 3"
	16" o/c	17' - 6"
	19.2" o/c	16' - 0"
2 x 12	12" o/c	23' - 10"
	16" o/c	20' - 8"
	19.2" o/c	18' - 10"

CLIMATIC & GEOGRAPHIC DESIGN CRITERIA - NOTE: STRUCTURAL ENGINEER TO VERIFY

GROUND SNOW LOAD	WIND SPEED	SEISMIC DESIGN CATEGORY	SUBJECT TO DAMAGE FROM			WINTER DESIGN TEMP	ICE BARRIER UNDERLAYMENT REQUIRED	FLOOD HAZARDS	AIR FREEZING INDEX	MEAN ANNUAL TEMP
			WEATHERING	FROST LINE	TERMITE					
5	130mph	CLASS D	MODERATE	<6"	V. HEAVY	27°F	NO	*see SURVEY*	20°F	65.7°F

STRUCTURE SQUARE FOOTAGE:

FIRST FLOOR CONDITIONED	1,079 SQFT
SECOND FLOOR CONDITIONED	889 SQFT
TOTAL CONDITIONED	1,968 SQFT
SCREENED PORCH	400 SQFT
TOTAL UNDER ROOF	2368 SQFT
SUN DECK	400 SQFT

PROJECT RENDERING

NOT TO SCALE
*THIS IS A CONCEPT ONLY, NOT MEANT AS CONSTRUCTION DRAWINGS

SHEET INDEX

LABEL	TITLE	DESCRIPTION
SURV	TREE & TOPOGRAPHY SURVEY	
SITE	SITE PLAN	
DRAIN	DRAINAGE PLAN	
MOB	MOBILIZATION PLAN	
A1.1	FOUNDATION PLAN	
A1.2	1ST FLOOR PLAN	
A1.3	ROOF PLAN	
A2.1	STREET ELEVATION	
A2.2	MARSH ELEVATION	
A2.3	LEFT SIDE ELEVATION	
A2.4	RIGHT SIDE ELEVATION	
A3.1	CROSS SECTION & DETAILS	
E1.1	ELECTRICAL PLAN	
M1.1	HVAC PLAN	
M2.1	PLUMBING PLAN	
REND	PROJECT RENDERINGS	

REVISIONS

DATE	DESCRIPTION
1/16/2019	

MEMBER AIBD AMERICAN INSTITUTE of BUILDING DESIGN

BRIDGEWATER CONSULTING LLC
145 DATAW DRIVE
BEAUFORT, SOUTH CAROLINA 29920
www.homesbybridgewater.com
(843) 422-7778

RESIDENTIAL DESIGN for MR. & MRS. CUNNINGHAM
LOT 4 COTTAGES AT FACTORY CREEK MARINA
106 FACTORY CREEK

REVISION DATE 1/16/2019

HOMEOWNER SIGNATURE & DATE OF ACCEPTANCE

SHEET
COVER

CHRISTENSEN ~ KHALIL SURVEYORS, INC.

3 FACULTY DRIVE, BEAUFORT SC 29907
(843) 524-4143 , FAX (843) 524-4141

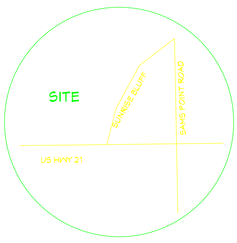

LOCATION MAP (Not To Scale)

LEGEND

IP(O) = OLD IRON PIPE FOUND
CM(O)= OLD CONCRETE MONUMENT FOUND
RB(N)= NEW REBAR SET 1/2" DIA.
CI(O) = OLD CRIMP TOP IRON PIPE
OE(O)= OLD OPEN END IRON PIPE FOUND
RB(O)= OLD REBAR FOUND
P.P. = POWER POLE
O.H.P. = OVERHEAD POWER LINES
△ = CALCULATED POINT

GENERAL NOTES:

1.) PRESENT OWNER OF PROPERTY SHOWN HEREON:
GLENN ABBOTTS
2.) TOTAL ACRES SURVEYED AND SHOWN HEREON:
AS SHOWN
3.) ACREAGE DETERMINED BY RECTANGULAR COORDINATES.
4.) TMN # 123-15-784
5.) IT IS EXPRESSLY UNDERSTOOD THAT CHRISTENSEN SURVEYING CO. DOES NOT CERTIFY TO THE EXISTENCE OR ABSENCE OF ANY FRESHWATER WETLANDS ON THE PROPERTY SHOWN HEREON.
6.) THE BEARINGS SHOWN HEREON ARE MAGNETIC AND AS SUCH SUBJECT TO LOCAL ATTRACTION.
7.) PROPERTY SHOWN HEREON IS LOCATED IN FLOOD ZONE "C" & A-9"
(14.00) PER FEMA MAP PANEL 450025-0100-D
DATED: SEPT. 29, 1986

REFERENCE PLATS & DEEDS

1.) 3349/1823
2.) PLAT BK 86/169

GRAPHIC SCALE

10 0 5 10 20 40

(IN FEET)
1 inch = 10ft.

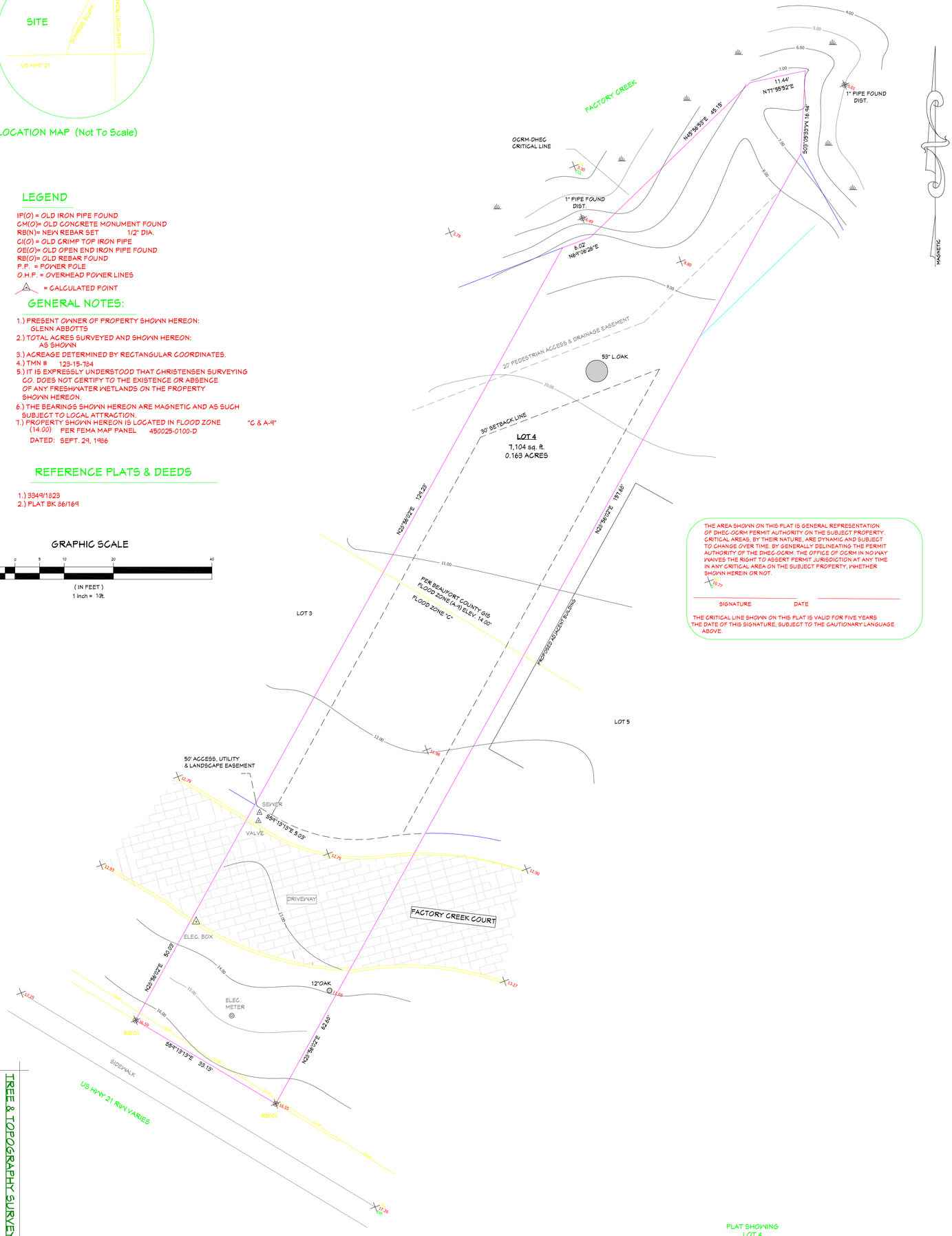

THE AREA SHOWN ON THIS PLAT IS GENERAL REPRESENTATION OF DHEC-OCRM PERMIT AUTHORITY ON THE SUBJECT PROPERTY. CRITICAL AREAS, BY THEIR NATURE, ARE DYNAMIC AND SUBJECT TO CHANGE OVER TIME. BY GENERALLY DELINEATING THE PERMIT AUTHORITY OF THE DHEC-OCRM. THE OFFICE OF OCRM IN NO WAY WAIVES THE RIGHT TO ASSERT PERMIT JURISDICTION AT ANY TIME IN ANY CRITICAL AREA ON THE SUBJECT PROPERTY, WHETHER SHOWN HEREIN OR NOT.

SIGNATURE DATE

THE CRITICAL LINE SHOWN ON THIS PLAT IS VALID FOR FIVE YEARS THE DATE OF THIS SIGNATURE, SUBJECT TO THE CAUTIONARY LANGUAGE ABOVE.

TREE & TOPOGRAPHY SURVEY
SCALE 1" = 10'

PLAT SHOWING
LOT 4
THE COTTAGES AT FACTORY CREEK
R123 015 000 0784 0000
PREPARED FOR;
LANCE ALEXANDER CUNNINGHAM
CITY OF BEAUFORT
BEAUFORT COUNTY, SOUTH CAROLINA
DATED: FEB. 4, 2018
SCALE: 1"=10'

CERTIFICATION:

I, ZYAD A. KHALIL, HEREBY STATE THAT TO THE BEST OF MY KNOWLEDGE, INFORMATION, AND BELIEF, THE SURVEY SHOWN HEREIN WAS MADE IN ACCORDANCE WITH THE REQUIREMENTS OF THE MINIMUM STANDARDS MANUAL FOR THE PRACTICE OF LAND SURVEYING IN SOUTH CAROLINA, AND MEETS OR EXCEEDS THE REQUIREMENTS FOR A CLASS SURVEY AS SPECIFIED THEREIN;

KHALIL SURVEYOR, INC. CERTIFICATE OF AUTHORIZATION C-00514 SOUTH CAROLINA

ZYAD A. KHALIL RLS
S.C. REG. NO. 15176
[THIS SURVEY IS NOT VALID UNLESS IT BEARS THE ORIGINAL SIGNATURE AND AN EMBOSSED SEAL]

EX-9557

SURV

SHEET

HOMEOWNER SIGNATURE & DATE OF ACCEPTANCE	REVISION DATE
	1/16/2019

RESIDENTIAL DESIGN for MR. & MRS. CUNNINGHAM
LOT 4 COTTAGES AT FACTORY CREEK MARINA
106 FACTORY CREEK

BRIDGEWATER CONSULTING LLC
145 DATAW DRIVE
BEAUFORT, SOUTH CAROLINA 29920
www.homesbybridgewater.com
(843) 422-7778

MEMBER AIBD AMERICAN INSTITUTE OF BUILDING DESIGNERS

CHRISTENSEN ~ KHALIL SURVEYORS, INC.
3 FACULTY DRIVE, BEAUFORT SC 29907
(843)524-4148 , FAX (843)524-4149

LOCATION MAP (Not To Scale)

LEGEND

IP(O) = OLD IRON PIPE FOUND
CM(O)= OLD CONCRETE MONUMENT FOUND
RB(N)= NEW REBAR SET
C.I.(O) = OLD CRIMP TOP IRON PIPE
OE(O)= OLD OPEN END IRON PIPE FOUND
RB(O)= OLD REBAR FOUND
P.F. = POWER POLE
O.H.P. = OVERHEAD POWER LINES
△ = CALCULATED POINT

GENERAL NOTES:

1.) PRESENT OWNER OF PROPERTY SHOWN HEREON:
GLENN ABBOTTS
2.) TOTAL ACRES SURVEYED AND SHOWN HEREON:
1.44 ACRES ±
3.) ACREAGE DETERMINED BY RECTANGULAR COORDINATES.
4.) TMN # 123-15-134
5.) IT IS EXPRESSLY UNDERSTOOD THAT CHRISTENSEN SURVEYING CO. DOES NOT CERTIFY TO THE EXISTENCE OR ABSENCE OF ANY FRESHWATER WETLANDS ON THE PROPERTY SHOWN HEREON.
6.) THE BEARINGS SHOWN HEREON ARE MAGNETIC AND AS SUCH SUBJECT TO LOCAL ATTRACTION.
7.) PROPERTY SHOWN HEREON IS LOCATED IN FLOOD ZONE "C & A-11"
(14.00) PER BEAUFORT COUNTY GIS
DATED: SEPT. 29, 1986
PER FEMA MAP PANEL 45002B-0100-D

REFERENCE PLATS & DEEDS

1.) 3344/1223
2.) PLAT BK 86/169

GRAPHIC SCALE
(IN FEET)
1 inch = 10ft.

THE AREA SHOWN ON THIS PLAT IS GENERAL REPRESENTATION OF DHEC-OCRM PERMIT AUTHORITY ON THE SUBJECT PROPERTY. CRITICAL AREAS, BY THEIR NATURE, ARE DYNAMIC AND SUBJECT TO CHANGE. THE BOUNDARIES SHOWN ARE VALID ONLY AT THE EXACT AUTHORITY OF THE DHEC-OCRM. THE OFFICE OF OCRM IN NO WAY WAIVES THE RIGHT TO ASSERT PERMIT JURISDICTION AT ANY TIME IN ANY SPECIFIC AREA ON THE SUBJECT PROPERTY, WHETHER SHOWN HEREIN OR NOT.
X.XX

SIGNATURE DATE

THE CRITICAL LINE SHOWN ON THIS PLAT IS VALID FOR FIVE YEARS THE EXPIRATION OF THIS SIGNATURE, SUBJECT TO THE CAUTIONARY LANGUAGE ABOVE.

EX-9557

PLAT SHOWING
LOT 4
THE COTTAGES AT FACTORY CREEK
R120/015/000/0134/0000
PREPARED FOR:
LANCE ALEXANDER CUNNINGHAM
CITY OF BEAUFORT
BEAUFORT COUNTY, SOUTH CAROLINA
DATED: FEB. 4, 2016
SCALE: 1"=10'

SITE PLAN

SCALE 1" = 10'

CERTIFICATION:

I, ZY'AD A. KHALIL, HEREBY STATE THAT TO THE BEST OF MY KNOWLEDGE, INFORMATION, AND BELIEF, THE SURVEY SHOWN HEREIN WAS MADE IN ACCORDANCE WITH THE REQUIREMENTS OF THE MINIMUM STANDARDS MANUAL FOR THE PRACTICE OF LAND SURVEYING IN SOUTH CAROLINA, AND MEETS OR EXCEEDS THE REQUIREMENTS FOR A CLASS "SURVEY" AS SPECIFIED THEREIN.

KHALIL SURVEYORS, INC. CHRISTENSEN
CERTIFICATE OF AUTHORIZATION C-00519

ZY'AD A. KHALIL RLS
S.C. REG. NO. 15176
[THIS SURVEY IS NOT VALID UNLESS IT BEARS THE ORIGINAL SIGNATURE AND AN EMBOSSED SEAL.]

MEMBER AIBD AMERICAN INSTITUTE of BUILDING DESIGN

BRIDGEWATER CONSULTING LLC
145 DATAW DRIVE
BEAUFORT, SOUTH CAROLINA 29920
www.homesbybridgewater.com
(843) 422-7778

RESIDENTIAL DESIGN for MR. & MRS. CUNNINGHAM
LOT 4 COTTAGES AT FACTORY CREEK MARINA
106 FACTORY CREEK

HOMEOWNER SIGNATURE & DATE OF ACCEPTANCE	REVISION DATE
	1/16/2019

SHEET
SITE

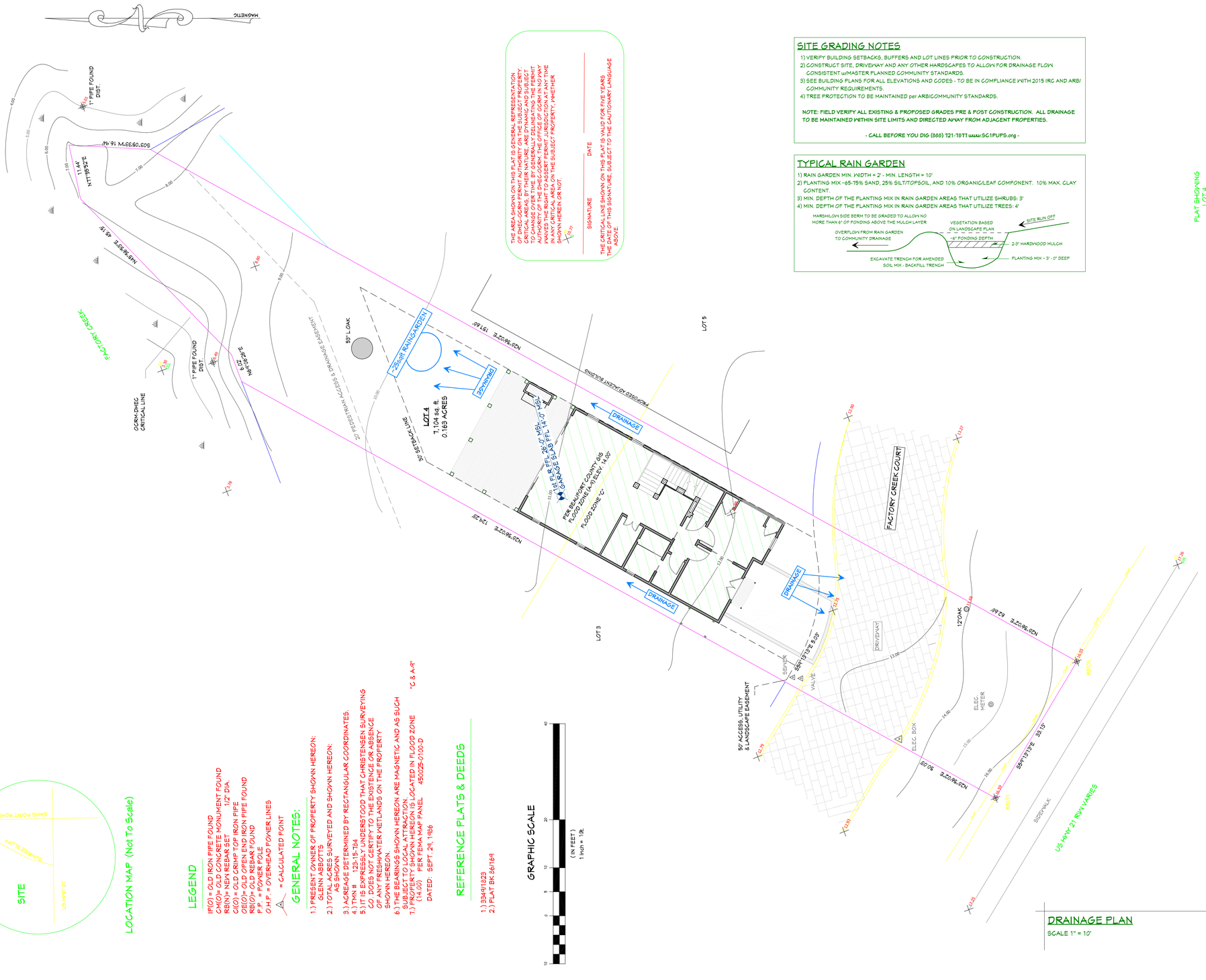

THE AREA SHOWN ON THIS PLAT IS GENERAL REPRESENTATION OF DHEC-OCRM PERMIT AUTHORITY ON THE SUBJECT PROPERTY. CRITICAL AREAS MAY HAVE MOVED, ARE DYNAMIC AND SUBJECT TO CHANGE. THEREFORE, THE SIGNATURE ON THIS PLAT DOES NOT AUTHORIZE OF THE DHEC-OCRM. THE OFFICE OF OCRM IN NO WAY WAIVES THE RIGHT TO ASSERT PERMIT JURISDICTION AT ANY TIME IN ANY FUTURE PERMIT APPLICATION ON THE SUBJECT PROPERTY, WHETHER SHOWN HEREIN OR NOT.

5-17-17

SIGNATURE DATE

THE CRITICAL LINE SHOWN ON THIS PLAT IS VALID FOR FIVE YEARS

CHRISTENSEN ~ KHALIL SURVEYORS, INC.

3 FACULTY DRIVE, BEAUFORT SC 29907
(843)524-4143 , FAX (843)524-4141

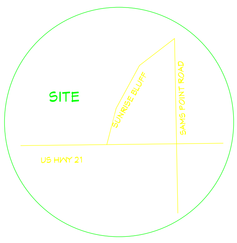

LOCATION MAP (Not To Scale)

LEGEND

IP(O) = OLD IRON PIPE FOUND
CM(O)= OLD CONCRETE MONUMENT FOUND
RB(N)= NEW REBAR SET 1/2" DIA.
CI(O) = OLD CRIMP TOP IRON PIPE
OE(O)= OLD OPEN END IRON PIPE FOUND
RB(O)= OLD REBAR FOUND
P.P. = POWER POLE
O.H.P. = OVERHEAD POWER LINES
△ = CALCULATED POINT

GENERAL NOTES:

1.) PRESENT OWNER OF PROPERTY SHOWN HEREON:
GLENN ABBOTTS
2.) TOTAL ACRES SURVEYED AND SHOWN HEREON:
AS SHOWN
3.) ACREAGE DETERMINED BY RECTANGULAR COORDINATES.
4.) TMN # 123-15-784
5.) IT IS EXPRESSLY UNDERSTOOD THAT CHRISTENSEN SURVEYING CO. DOES NOT CERTIFY TO THE EXISTENCE OR ABSENCE OF ANY FRESHWATER WETLANDS ON THE PROPERTY SHOWN HEREON.
6.) THE BEARINGS SHOWN HEREON ARE MAGNETIC AND AS SUCH SUBJECT TO LOCAL ATTRACTION.
7.) PROPERTY SHOWN HEREON IS LOCATED IN FLOOD ZONE "C" & A-9"
(14.00) PER FEMA MAP PANEL 450025-0100-D
DATED: SEPT. 29, 1986

REFERENCE PLATS & DEEDS

1.) 3349/1823
2.) PLAT BK 86/169

GRAPHIC SCALE

10 0 5 10 20 40

(IN FEET)
1 inch = 10ft.

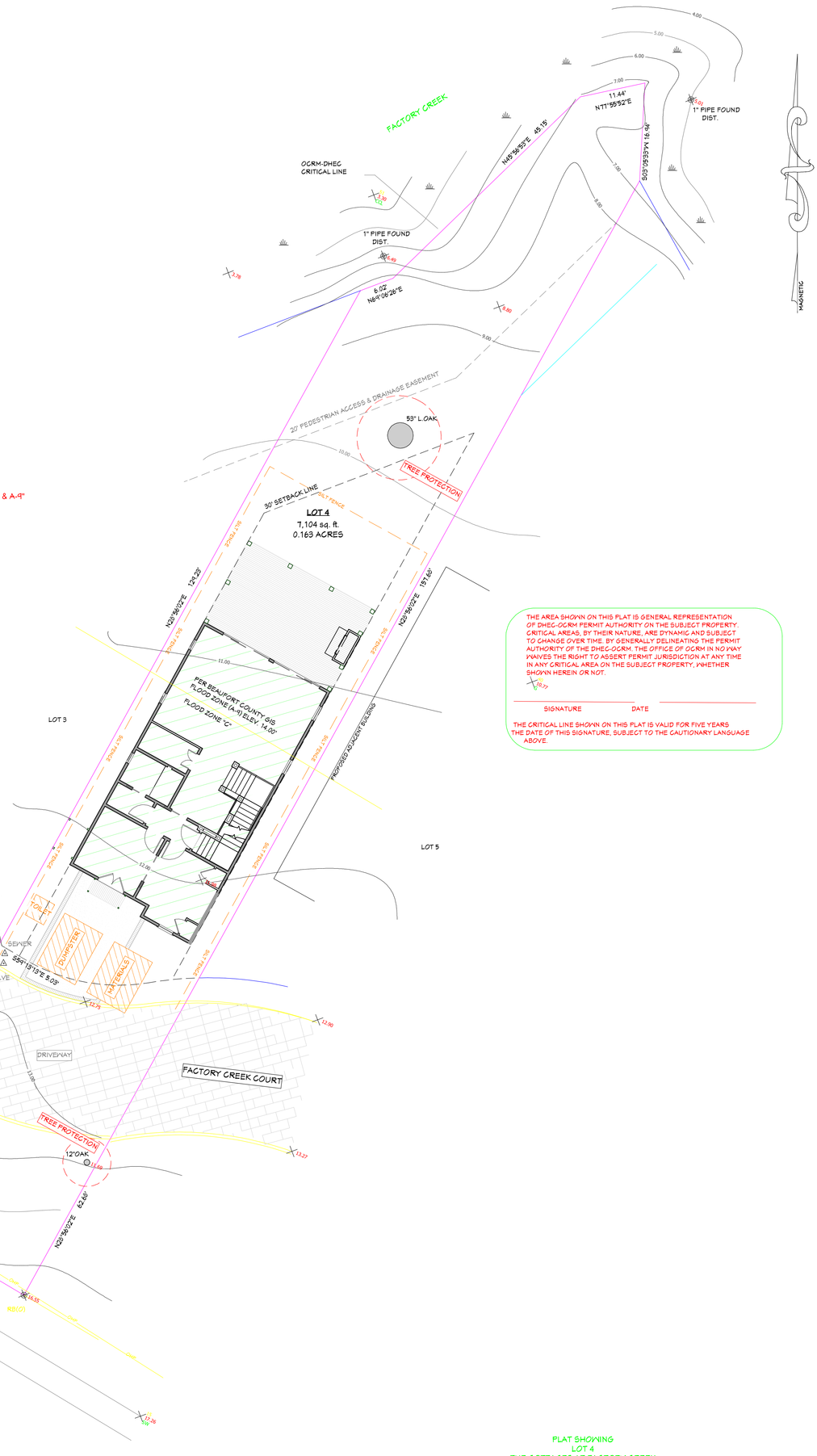

THE AREA SHOWN ON THIS PLAT IS GENERAL REPRESENTATION OF DHEC-OCRM PERMIT AUTHORITY ON THE SUBJECT PROPERTY. CRITICAL AREAS, BY THEIR NATURE, ARE DYNAMIC AND SUBJECT TO CHANGE OVER TIME. BY GENERALLY DELINEATING THE PERMIT AUTHORITY OF THE DHEC-OCRM. THE OFFICE OF OCRM IN NO WAY WAIVES THE RIGHT TO ASSERT PERMIT JURISDICTION AT ANY TIME IN ANY CRITICAL AREA ON THE SUBJECT PROPERTY, WHETHER SHOWN HEREIN OR NOT.

SIGNATURE DATE

THE CRITICAL LINE SHOWN ON THIS PLAT IS VALID FOR FIVE YEARS THE DATE OF THIS SIGNATURE, SUBJECT TO THE CAUTIONARY LANGUAGE ABOVE.

MOBILIZATION PLAN
SCALE 1" = 10'

PLAT SHOWING
LOT 4
THE COTTAGES AT FACTORY CREEK
R123 015 000 0784 0000
PREPARED FOR;
LANCE ALEXANDER CUNNINGHAM
CITY OF BEAUFORT
BEAUFORT COUNTY, SOUTH CAROLINA
DATED: FEB. 4, 2018
SCALE: 1"=10'

CERTIFICATION:

I, ZYAD A. KHALIL, HEREBY STATE THAT TO THE BEST OF MY KNOWLEDGE, INFORMATION, AND BELIEF, THE SURVEY SHOWN HEREIN WAS MADE IN ACCORDANCE WITH THE REQUIREMENTS OF THE MINIMUM STANDARDS MANUAL FOR THE PRACTICE OF LAND SURVEYING IN SOUTH CAROLINA, AND MEETS OR EXCEEDS THE REQUIREMENTS FOR A CLASS SURVEY AS SPECIFIED THEREIN;

ZYAD A. KHALIL RLS
S.C. REG. NO. 15176
[THIS SURVEY IS NOT VALID UNLESS IT BEARS THE ORIGINAL SIGNATURE AND AN EMBOSSED SEAL]

KHALIL SURVEYOR, INC. CERTIFICATE OF AUTHORIZATION C-005514 SOUTH CAROLINA

EX-9557

SHEET	HOMEOWNER SIGNATURE & DATE OF ACCEPTANCE	REVISION DATE			
MOB		1/16/2019	RESIDENTIAL DESIGN for MR. & MRS. CUNNINGHAM LOT 4 COTTAGES AT FACTORY CREEK MARINA 106 FACTORY CREEK	BRIDGEWATER CONSULTING LLC 145 DATAW DRIVE BEAUFORT, SOUTH CAROLINA 29920 www.homesbybridgewater.com (843) 422-7778	MEMBER AIBD ASSOCIATION OF INTERIOR DESIGNERS

FOUNDATION CONSTRUCTION NOTES

1) ALL FOUNDATIONS TO COMPLY WITH 2015 IRC CHAPTER 4: FOUNDATIONS
2) UNDER FLOOR SPACE VENTILATION IN ACCORDANCE WITH 2015 IRC R408
3) PROVIDE HYDROSTATIC VENTING PER FLOOD ZONE REQUIREMENTS
4) TYPICAL THICKENED SLAB: THICKENED SLAB @ CRITICAL BEARING POINTS TO BE MIN. 1'-0" DEEP x 2'-0" WIDE CONC., CENTERED ON WALL w/ (2) #5 REINFORCING BARS CONTINUOUS w/ 6x6 W9/W9 (see ENGINEERING)
5) TYPICAL REINFORCED CMU WALL FOOTING: TO BE MIN. 1'-0" DEEP x 2'-0" WIDE CONC. w/ (2) #5 REINFORCING BARS AND #5 BARS @ 3'-6" o/c EXTENDING TO MIN. 2'-0" OVERLAP w/ REINFORCING IN CMU WALL
6) TYPICAL REINFORCED CMU WALL: 8" x 8" x 16" CMU BLOCK w/ HORIZONTAL BED REINFORCING @ 8" o/c AND #5 REINFORCING BARS @ 3'-6" o/c w/ DOWELS TO MATCH (MIN. 2'-0" OVERLAP FROM FOOTING TO TOP OF CMU WALL) - FILL ALL CELLS
7) TYPICAL CONNECTING GRADE BEAM: FOOTINGS @ CONNECTING GRADE BEAM TO BE 12" DEEP x 12" WIDE CONC. w/ (2) #5 REINFORCING BARS CONTINUOUS
8) TYPICAL SLAB ON GRADE: 4" THICK CONC. o/ 6MIL VAPOR BARRIER w/ MIN. 12" x 16" TURNED DOWN EDGE w/ (2) #5 REINFORCING BARS CONTINUOUS AND 6x6 W9/W9
9) TYPICAL REINFORCED CMU PIER FOOTING: TO BE 12" DEEP x DOUBLE THE CMU PIER WIDTH CONC. w/ (2) #5 REINFORCING BARS EACH DIRECTION AND (4 TOTAL) #5 BARS EXTENDING TO MIN. 2'-0" OVERLAP w/ REINFORCING IN CMU PIER
10) TYPICAL REINFORCED CMU PIER: 8"x12"x12 " CMU BLOCK (or 8"x16"x16" CMU BLOCK AS NOTED ON PLAN) w/ HORIZONTAL BED REINFORCING @ 8" o/c AND (2) TOTAL #5 REINFORCING BARS w/ DOWELS TO MATCH (MIN. 2'-0" OVERLAP FROM FOOTING TO TOP OF CMU PIER) - FILL ALL CELLS

NOTE: STRUCTURAL ENGINEERING TO TAKE PRECEDENCE FOR ALL FOUNDATION SIZES, LOCATION AND PLACEMENT OF WORK DESCRIBED.

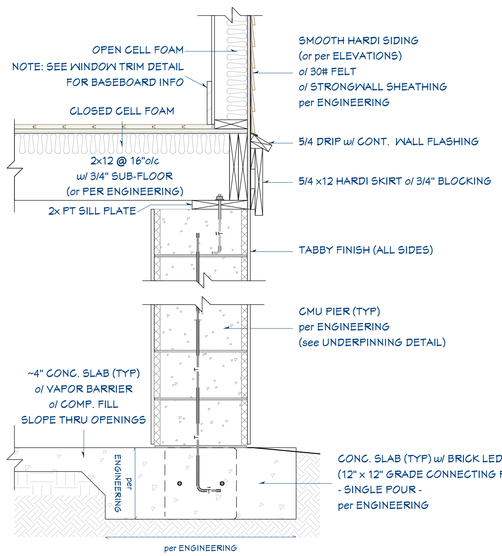

NOTE: ALL MATERIALS SIZES/HOLD-DOWNS/ STRAPS/FASTENERS per ENGINEERING

FOUNDATION WALL DETAIL

SCALE 1" = 1' - 0"

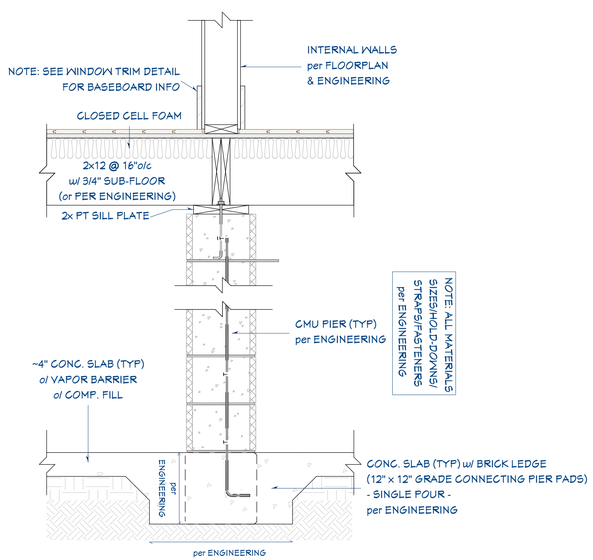

NOTE: ALL MATERIALS SIZES/HOLD-DOWNS/ STRAPS/FASTENERS per ENGINEERING

SEE ENGINEERING FOR ALL FOUNDATION DETAILS
THIS DRAWING SHOULD BE USED FOR DIMENSIONAL PURPOSES ONLY

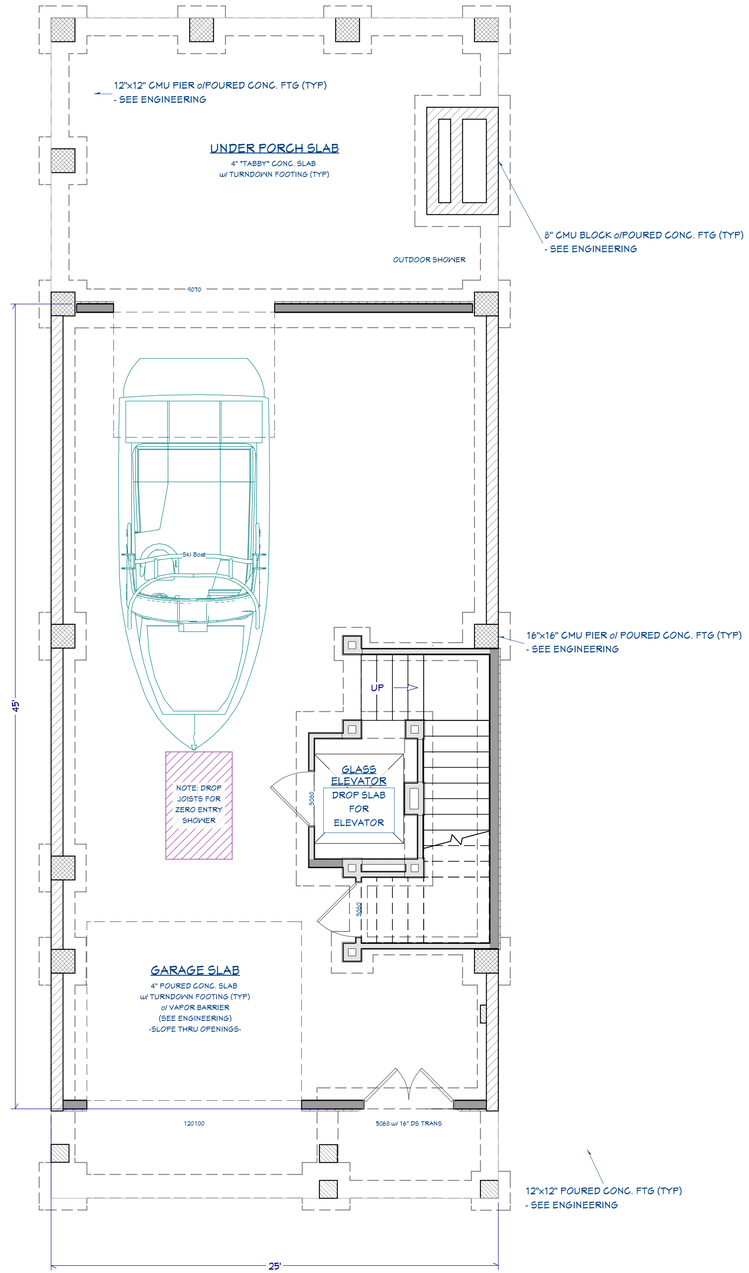

FOUNDATION PLAN

SCALE 1/4" = 1' - 0"

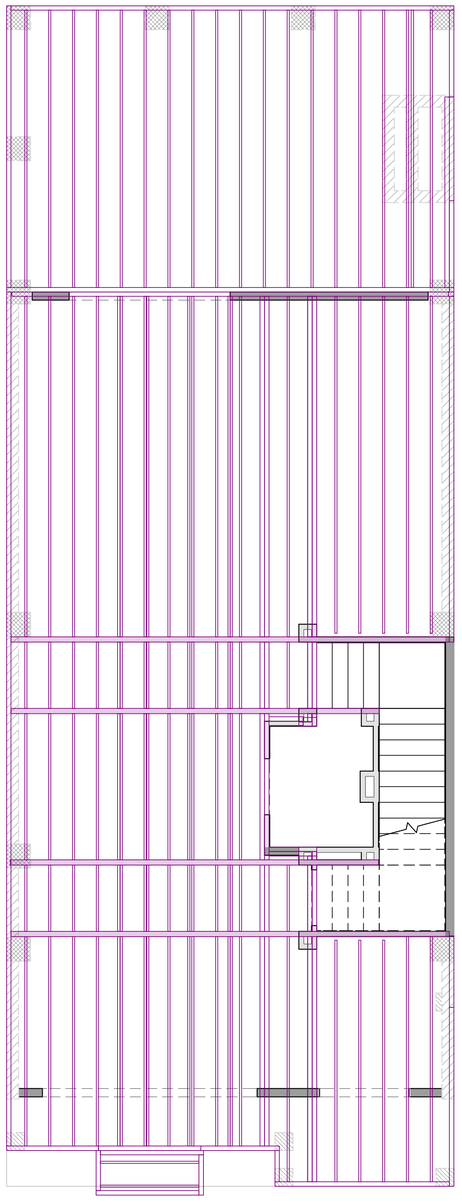

1st FLOOR FRAMING PLAN

SCALE 1/4" = 1' - 0"

MEMBER AIBD AMERICAN INSTITUTE of BUILDING DESIGN

BRIDGEWATER CONSULTING LLC
145 DATAW DRIVE
BEAUFORT, SOUTH CAROLINA 29920
www.homesbybridgewater.com
(843) 422-7778

RESIDENTIAL DESIGN for MR. & MRS. CUNNINGHAM
LOT 4 COTTAGES AT FACTORY CREEK MARINA
106 FACTORY CREEK

REVISION DATE	1/16/2019
HOMEOWNER SIGNATURE & DATE OF ACCEPTANCE	

SHEET A1.1

FRAMING CONSTRUCTION NOTES

1) EXTERIOR WALLS: 1/2" PLYWOOD SHEATHING o/2x4 and/or 2x6 @ 16"o/c w/ BLOCKING MIDSPAN (UNLESS OTHERWISE NOTED)
2) INTERIOR WALLS: 2x4 and/or 2x6 @ 16"o/c w/ BLOCKING MIDSPAN (UNLESS OTHERWISE NOTED)
3) FIRST FLOOR SYSTEM: 2x12 @ 16"o/c w/ 3/4" T&G PLYWOOD (OR EQUIVALENT), GLUED & NAILED
4) 2nd FLOOR SYSTEM: 14" OPEN WEB TRUSSES (per ENGINEERING) w/ 3/4" T&G PLYWOOD (OR EQUIVALENT), GLUED & NAILED - ENGINEERED TRUSS SHOP DRAWINGS TAKE PRECEDENCE
5) CEILING JOISTS per ENGINEERING
6) ROOF RAFTERS: 1/2" EXT SHEATHING NAILED ON 2x10 @ 16"o/c (per ENGINEERING) w/ SIMPSON HURRICANE CLIPS

NOTE: STRUCTURAL ENGINEERING TO TAKE PRECEDENCE FOR ALL FRAMING MEMBER SIZES, LOCATION AND PLACEMENT OF WORK DESCRIBED.

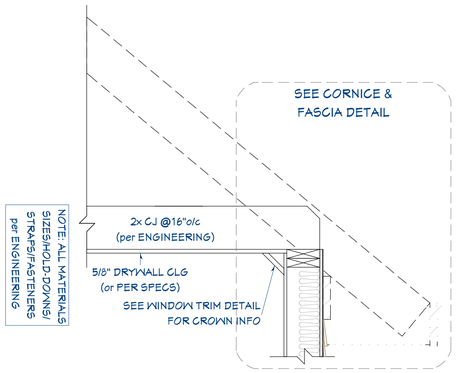

2nd FLR CLG HGT per FLOORPLAN

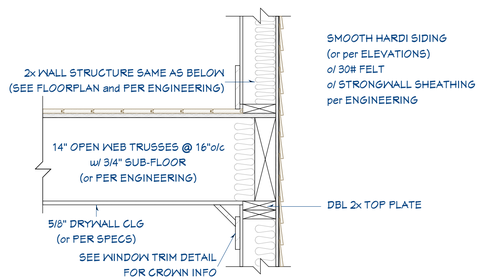

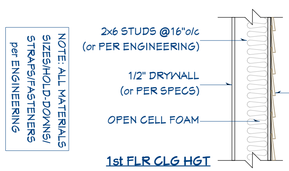

1st FLR CLG HGT per FLOORPLAN

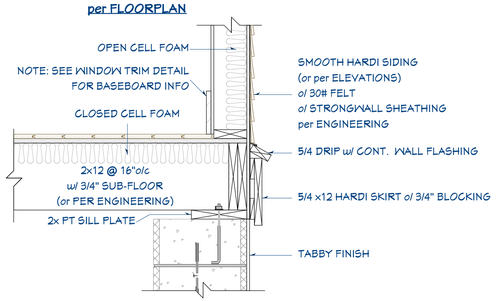

TYPICAL WALL SECTION
SCALE 1" = 1' - 0"

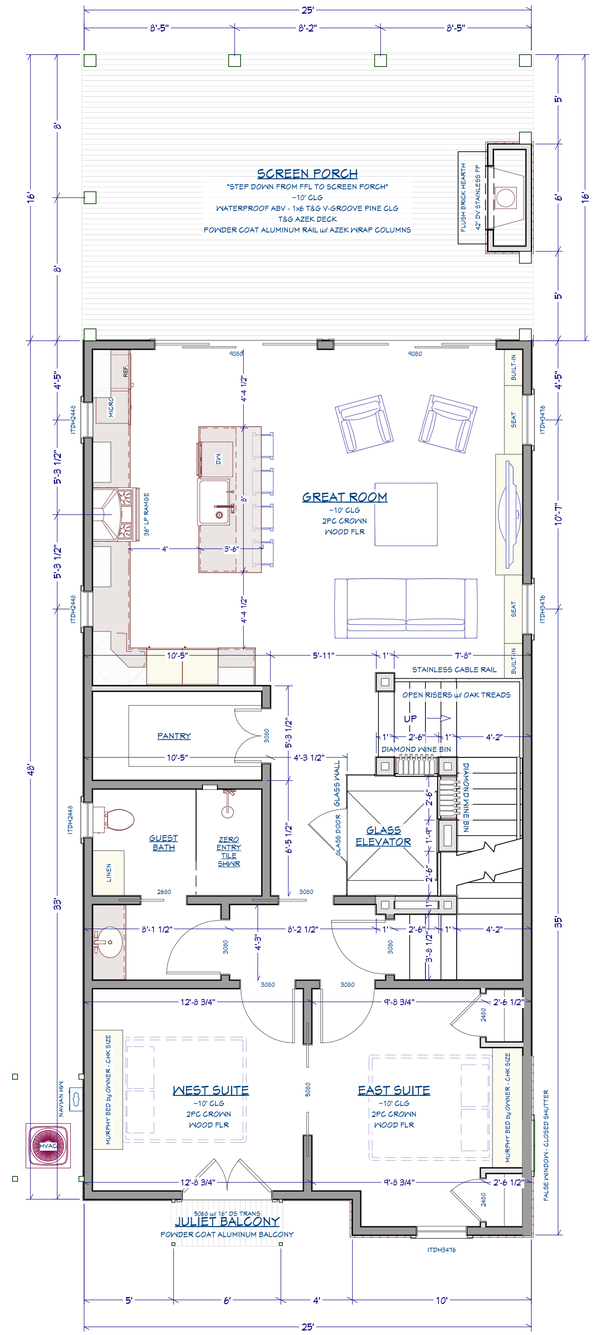

1st FLOOR PLAN
SCALE 1/4" = 1' - 0"

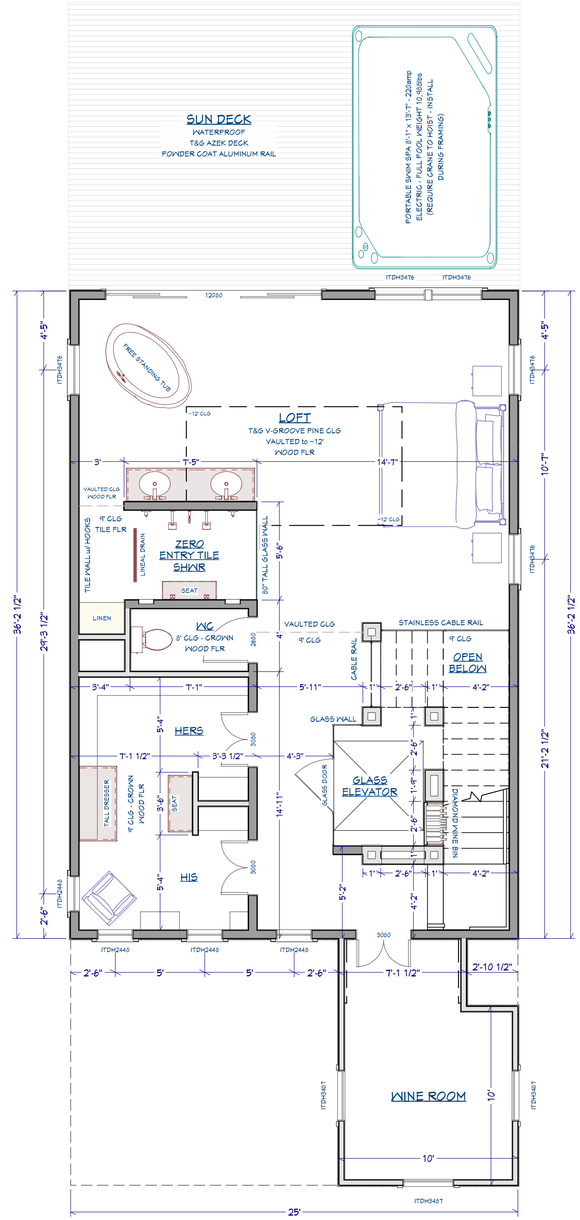

2nd FLOOR PLAN
SCALE 1/4" = 1' - 0"

MEMBER AIBD AMERICAN INSTITUTE of BUILDING DESIGN

BRIDGEWATER CONSULTING LLC
145 DATAW DRIVE
BEAUFORT, SOUTH CAROLINA 29920
www.homesbybridgewater.com
(843) 422-7778

RESIDENTIAL DESIGN for MR. & MRS. CUNNINGHAM
LOT 4 COTTAGES AT FACTORY CREEK MARINA
106 FACTORY CREEK

REVISION DATE	1/16/2019
HOMEOWNER SIGNATURE & DATE OF ACCEPTANCE	

SHEET
A1.2

FRAMING CONSTRUCTION NOTES

1) EXTERIOR WALLS: 1/2" PLYWOOD SHEATHING o/2x4 and/or 2x6 @ 16"o/c w/ BLOCKING MIDSPAN (UNLESS OTHERWISE NOTED)
2) INTERIOR WALLS: 2x4 and/or 2x6 @ 16"o/c w/ BLOCKING MIDSPAN (UNLESS OTHERWISE NOTED)
3) FIRST FLOOR SYSTEM: 2x12 @ 16"o/c w/ 3/4" T&G PLYWOOD (OR EQUIVALENT), GLUED & NAILED
4) 2nd FLOOR SYSTEM: 14" OPEN WEB TRUSSES (per ENGINEERING) w/ 3/4" T&G PLYWOOD (OR EQUIVALENT), GLUED & NAILED - ENGINEERED TRUSS SHOP DRAWINGS TAKE PRECEDENCE
5) CEILING JOISTS per ENGINEERING
6) ROOF RAFTERS: 1/2" EXT SHEATHING NAILED ON 2x10 @ 16"o/c (per ENGINEERING) w/ SIMPSON HURRICANE CLIPS

NOTE: STRUCTURAL ENGINEERING TO TAKE PRECEDENCE FOR ALL FRAMING MEMBER SIZES, LOCATION AND PLACEMENT OF WORK DESCRIBED.

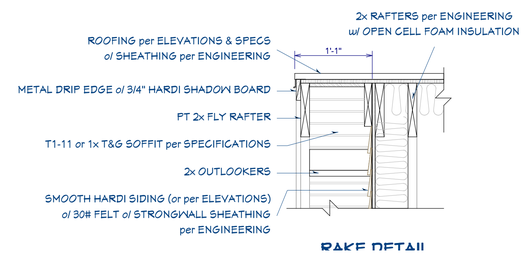

OPEN RAFTER RAKE DETAIL

SCALE 1" = 1' - 0"

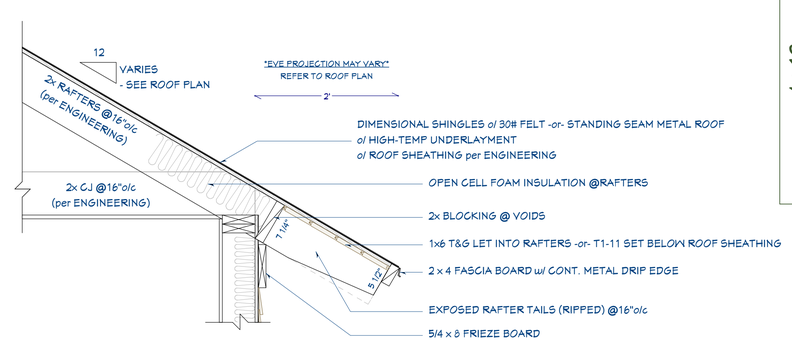

CORNICE & FASCIA DETAIL

SCALE 1" = 1' - 0"

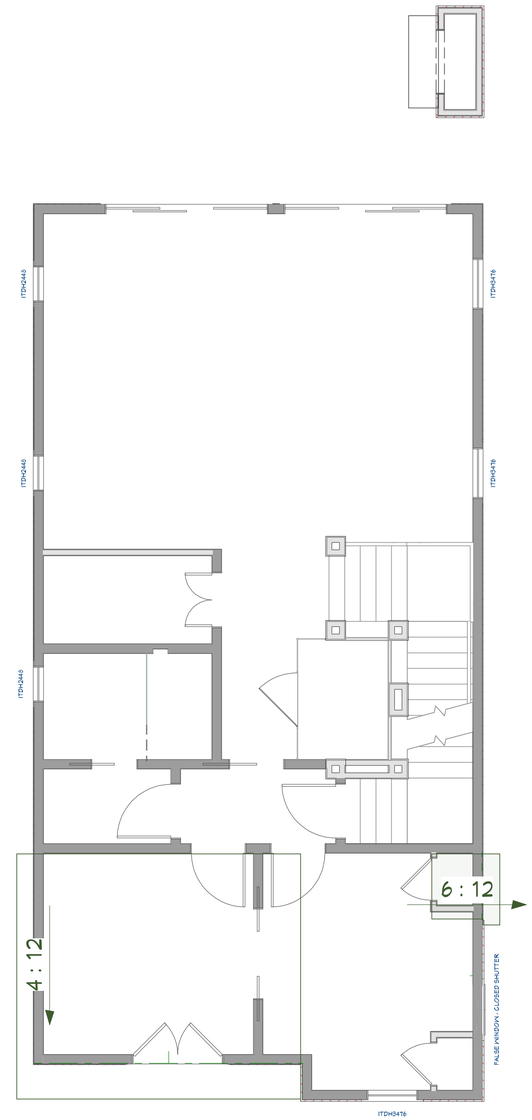

ROOF PLAN

SCALE 1/4" = 1' - 0"

MEMBER
AIBD
AMERICAN INSTITUTE of BUILDING DESIGN

BRIDGEWATER CONSULTING LLC
145 DATAW DRIVE
BEAUFORT, SOUTH CAROLINA 29920
www.homesbybridgewater.com
(843) 422-7778

RESIDENTIAL DESIGN for MR. & MRS. CUNNINGHAM
LOT 4 COTTAGES AT FACTORY CREEK MARINA
106 FACTORY CREEK

REVISION DATE	HOMEOWNER SIGNATURE & DATE OF ACCEPTANCE
1/16/2019	

SHEET
A1.3

STREET ELEVATION

SCALE 1/4" = 1' - 0"

MEMBER
AIBD
AMERICAN INSTITUTE of BUILDING DESIGN

BRIDGEWATER CONSULTING LLC
145 DATAW DRIVE
BEAUFORT, SOUTH CAROLINA 29920
www.homesbybridgewater.com
(843) 422-7778

RESIDENTIAL DESIGN for MR. & MRS. CUNNINGHAM
LOT 4 COTTAGES AT FACTORY CREEK MARINA
1008 FACTORY CREEK

REVISION DATE	1/16/2019
HOMEOWNER SIGNATURE & DATE OF ACCEPTANCE	

SHEET
A2.1

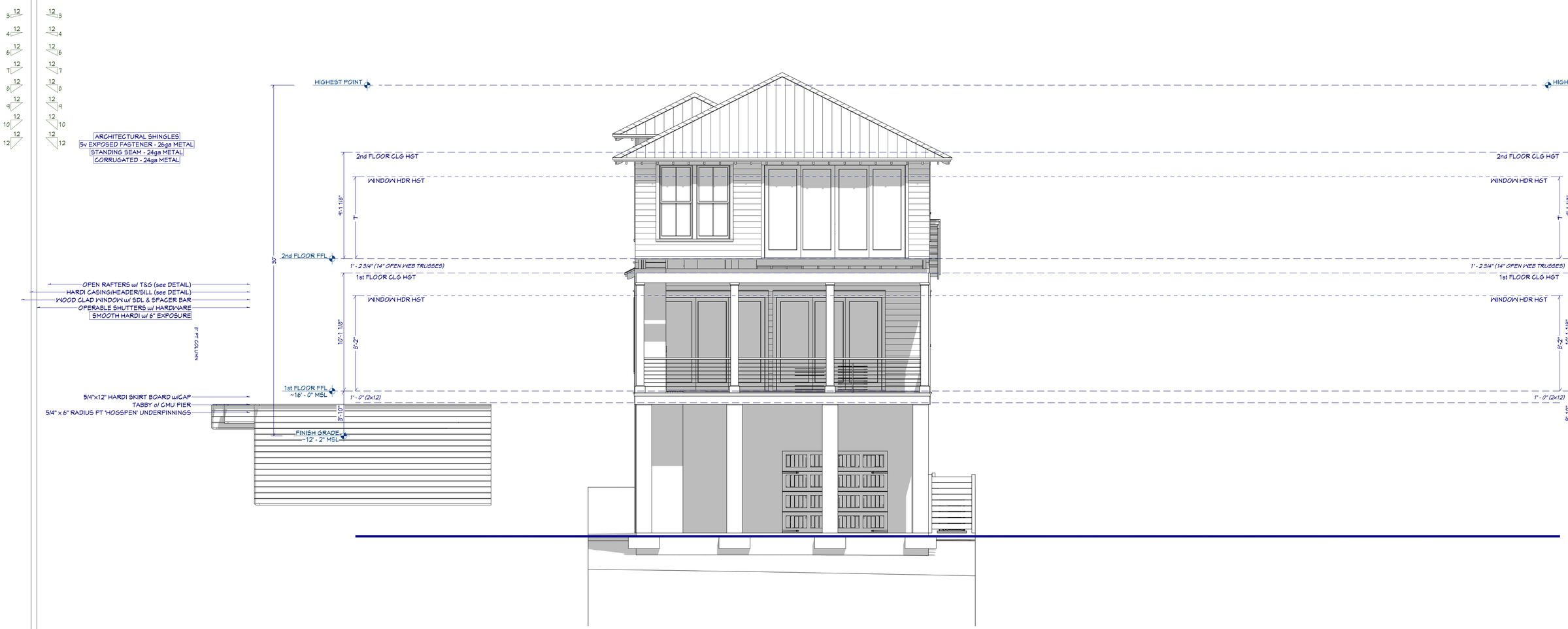

MARSH ELEVATION

SCALE 1/4" = 1' - 0"

MEMBER
AIBD
AMERICAN INSTITUTE of BUILDING DESIGN

BRIDGEWATER CONSULTING LLC
145 DATAW DRIVE
BEAUFORT, SOUTH CAROLINA 29920
www.homesbybridgewater.com
(843) 422-7778

RESIDENTIAL DESIGN for MR & MRS. CUNNINGHAM
LOT 4 COTTAGES AT FACTORY CREEK MARINA
1600 FACTORY CREEK

REVISION DATE	1/16/2019
HOMEOWNER SIGNATURE & DATE OF ACCEPTANCE	

SHEET
A2.2

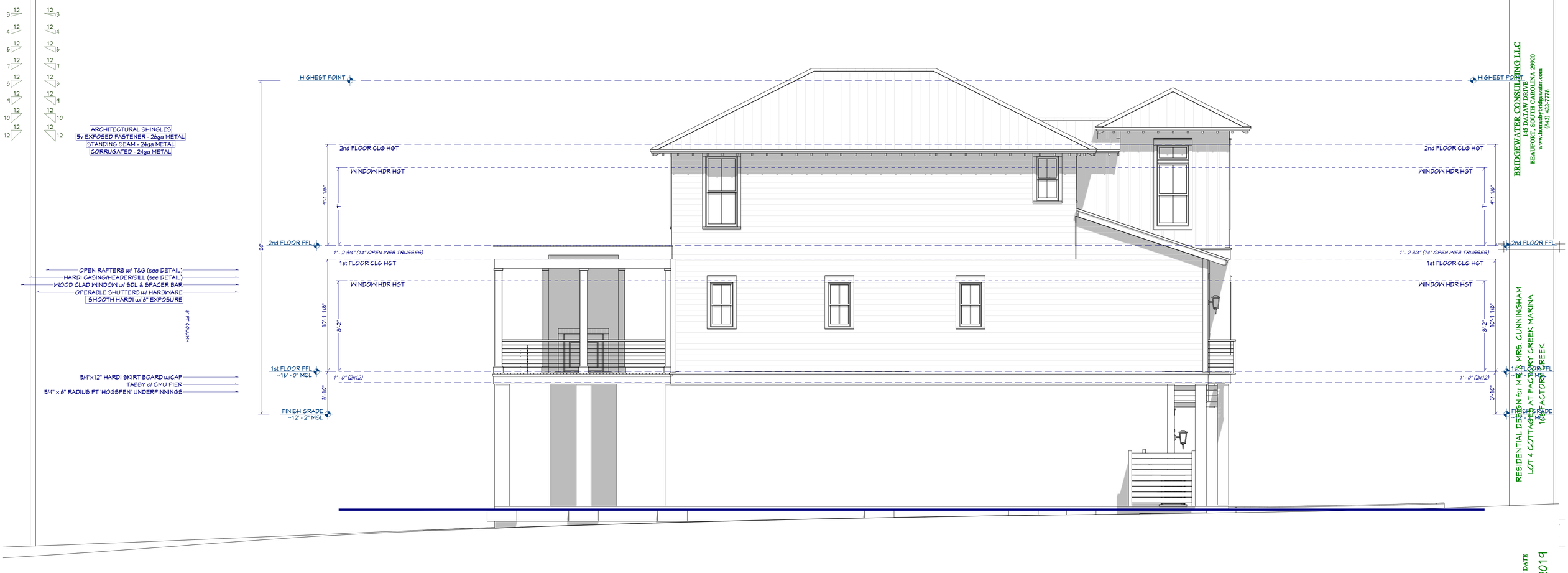

LEFT SIDE ELEVATION

SCALE 1/4" = 1' - 0"

MEMBER
AIBD
AMERICAN INSTITUTE of BUILDING DESIGN

BRIDGEWATER CONSULTING LLC
145 DATAW DRIVE
BEAUFORT, SOUTH CAROLINA 29920
www.homesbybridgewater.com
(843) 422-7778

RESIDENTIAL DESIGN for MR & MRS. CUNNINGHAM
LOT 4 COTTAGES AT FACTORY CREEK MARINA
1004 FACTORY CREEK

REVISION DATE	
	1/16/2019

HOMEOWNER SIGNATURE & DATE OF ACCEPTANCE

SHEET
A2.3

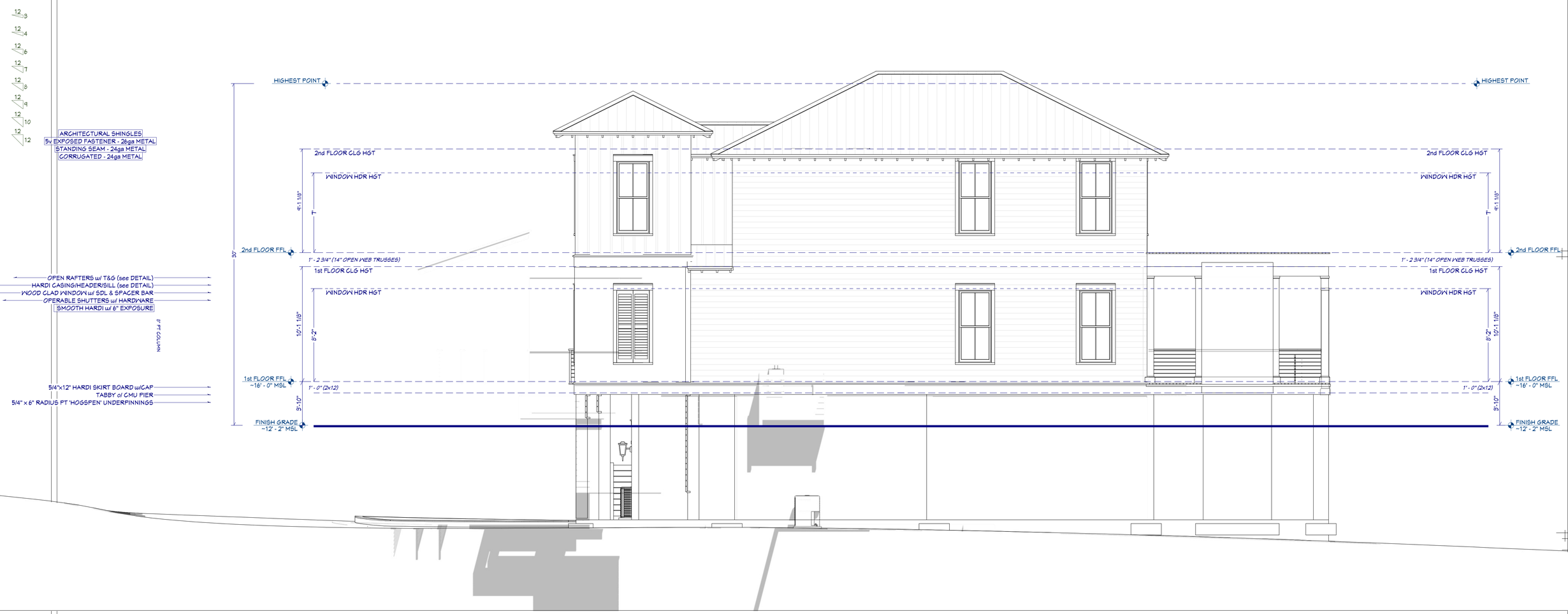

RIGHT SIDE ELEVATION

SCALE 1/4" = 1' - 0"

MEMBER
AIBD
AMERICAN INSTITUTE of BUILDING DESIGN

BRIDGEWATER CONSULTING LLC
145 DATAW DRIVE
BEAUFORT, SOUTH CAROLINA 29920
www.homesbybridgewater.com
(843) 422-7778

RESIDENTIAL DESIGN for MR. & MRS. CUNNINGHAM
LOT 4 COTTAGES AT FACTORY CREEK MARINA
106 FACTORY CREEK

REVISION DATE
1/16/2019

HOMEOWNER SIGNATURE & DATE OF ACCEPTANCE

SHEET
A2.4

WALL CONSTRUCTION NOTES

1) WALL CONSTRUCTION SHALL BE CAPABLE OF ACCOMMODATING ALL LOADS IMPOSED ACCORDING TO SECTION R301 AND TRANSMITTING THE RESULTING LOADS TO THE SUPPORTING STRUCTURAL ELEMENTS
2) COMPRESSIBLE FLOOR COVERING MATERIALS SHALL NOT BE INSTALLED UNDER WALLS, PARTITIONS OR COLUMNS
3) EXCEPT AS NOTED OTHERWISE PERMITTED, STUDS SHALL BE A MIN. #2 STANDARD OR STUD GRADE LUMBER
4) SIZE, HEIGHT AND SPACING OF STUDS SHALL BE IN ACCORDANCE WITH SECTION R602.3(5)
5) DRILLING & NOTCHING OF STUDS AND TOP PLATES SHALL BE IN ACCORDANCE WITH SECTION R602.6
6) HEADER SPANS FOR BEARING WALLS SHALL COMPLY WITH SECTION R602.7
1) FIREBLOCKING SHALL BE PROVIDED IN WOOD FRAME CONSTRUCTION PER SECTION R602.8 AND SHALL CONSIST OF ONE OF THE FOLLOWING:
- 2" NOMINAL LUMBER
- TWO THICKNESSES OF 1" NOMINAL WITH BROKEN LAP JOINTS
- ONE THICKNESS OF 3/4" PARTICLE BOARD WITH JOINTS BACKED BY 3/4" PARTICLE BOARD, 1/2" GYPSUM BOARD, OR 1/4" CEMENT-BASED MILLBOARD
- BATTS OR BLANKETS OF MINERAL OR GLASS FIBER OR OTHER APPROVED NON-RIGID MATERIALS
1) FOUNDATION CRIPPLE WALLS SHALL BE FRAMED OF STUDS NOT LESS IN SIZE THAN THE STUDS ABOVE
2) CRIPPLE WALLS EXCEEDING 4' IN HEIGHT TO BE FRAMED WITH STUDS AS REQUIRED FOR AN ADDITIONAL STORY
3) FOUNDATION CRIPPLE WALLS WITH A STUD HEIGHT LESS THAN 14" SHALL BE SHEATHED ON AT LEAST ONE SIDE WITH WOOD STRUCTURAL PANELS
4) CRIPPLE WALLS SHALL BE SUPPORTED ON A CONTINUOUS FOUNDATION
5) WALLS SHALL BE BRACED IN ACCORDANCE WITH SECTION R602.10
6) BRACED WALL LINES SHALL CONSIST OF BRACED WALL PANEL CONSTRUCTION METHODS IN ACCORDANCE WITH SECTION R602.10.1
7) CRIPPLE WALL BRACING SHALL COMPLY WITH SECTION R602.10.2
8) CONNECTIONS FOR BRACED WALL LINES SHALL COMPLY WITH SECTION R602.10.8 AND TABLE R602.3(1)

EXTERIOR WALL COVERING NOTES

1) WEATHER EXPOSED SURFACES SHALL BE PROVIDED WITH A WATER-RESISTANT BARRIER (BUILDING FELT, TYVEK OR SIMILAR, OR OTHER APPROVED MATERIAL) IN ACCORDANCE WITH SECTION R703.2
2) WOOD, HARDBOARD AND WOODEN STRUCTURAL PANEL SHALL BE INSTALLED IN ACCORDANCE WITH SECTION R703.3.1 FOR PANELS AND SECTION R703.3.2 FOR HORIZONTAL SIDING
3) EXTERIOR WALL COVERINGS SHALL HAVE THE MINIMUM THICKNESS AND BE ATTACHED IN ACCORDANCE WITH TABLE R703.4
4) WOOD SHAKES AND SHINGLES USED AS AN EXTERIOR WALL COVERING SHALL BE INSTALLED IN ACCORDANCE WITH SECTION R703.5
5) FIBER CEMENT SIDING SHALL BE INSTALLED IN ACCORDANCE WITH SECTION R703.10.1 AND SECTION 703.10.2
6) VINYL SIDING SHALL BE INSTALLED PER THE MANUFACTURER'S INSTALLATION INSTRUCTIONS
7) EXTERIOR PLASTER SHALL BE INSTALLED IN ACCORDANCE WITH SECTION R703.6
8) EXTERIOR STONE AND MASONRY VENEER SHALL BE INSTALLED IN ACCORDANCE WITH SECTION R703.7
9) MASONRY VENEER ABOVE OPENINGS SHALL BE SUPPORTED BY NON-COMBUSTIBLE LINTELS
10) MASONRY VENEER SHALL BE ANCHORED TO THE SUPPORTING WALL WITH CORROSION-RESISTANT METAL TIES
11) MASONRY VENEER SHALL BE PROVIDED WITH FLASHING
12) WEEPHOLES AT LEAST 3/16" IN DIAMETER SHALL BE PROVIDE IN THE OUTSIDE WYTHE OF MASONRY WALLS AT A MAX. SPACING OF 33" o/c
13) EXTERIOR WALLS SHALL BE PROVIDED WITH FLASHING TO PREVENT THE ENTRY OF WATER INTO THE WALL CAVITY
14) EXTERIOR INSULATION FINISH SYSTEMS (EIFS) SHALL NOT BE USED: SUBSTITUTE HARDCOAT MASONRY STUCCO/TABBY OR PLASTER

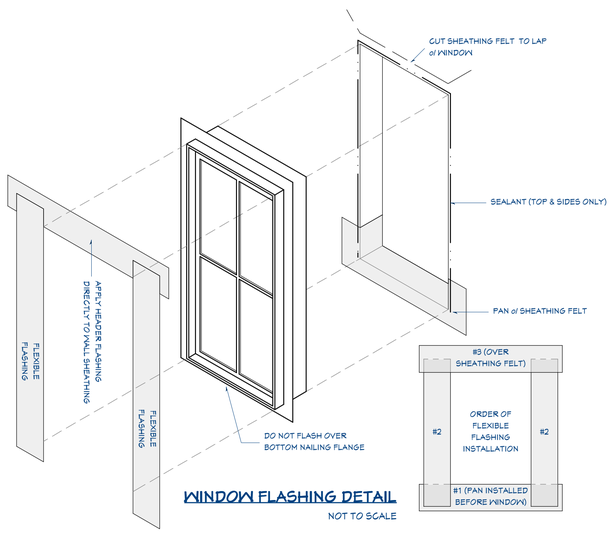

WINDOW FLASHING DETAIL
NOT TO SCALE

WINDOW HEADER-SILL-JAMB DETAIL
SCALE 2" = 1' - 0"

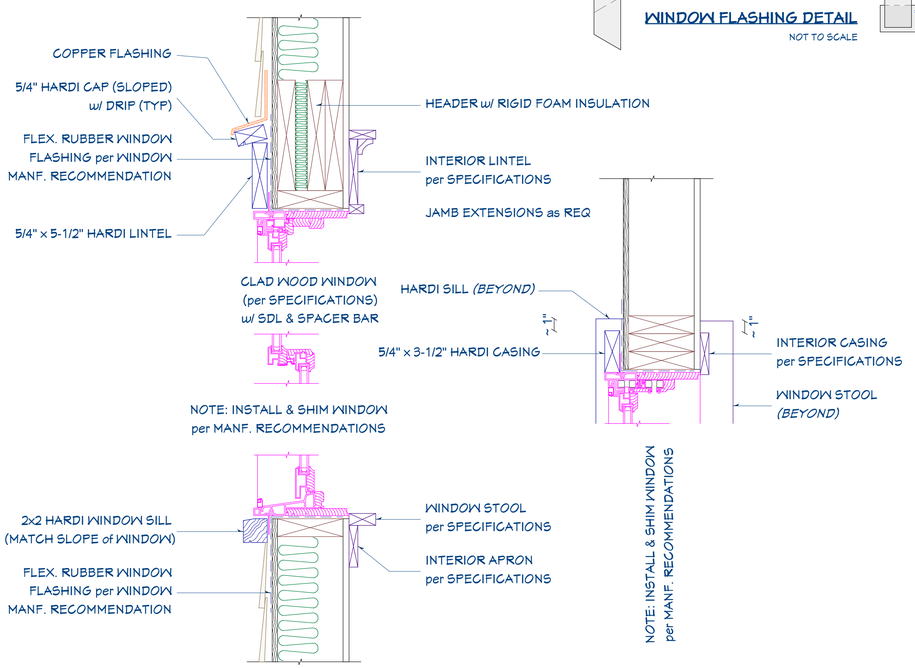

PORCH & RAIL DETAIL
SCALE 1/2" = 1' - 0"

INTERIOR TRIM DETAIL
SCALE 1" = 1' - 0"

CORNER BOARD DETAIL
SCALE 1-1/2" = 1' - 0"

PORCH CORNICE-FASCIA & CEILING DETAIL
SCALE 1" = 1' - 0"

CROSS SECTION
SCALE 1/4" = 1' - 0"

MEMBER AIBD AMERICAN INSTITUTE of BUILDING DESIGN

BRIDGEWATER CONSULTING LLC
145 DATAW DRIVE
BEAUFORT, SOUTH CAROLINA 29920
www.homesbybridgewater.com
(843) 422-7778

RESIDENTIAL DESIGN for MR. & MRS. CUNNINGHAM
LOT 4 COTTAGES AT FACTORY CREEK MARINA
106 FACTORY CREEK

REVISION DATE	1/16/2019
HOMEOWNER SIGNATURE & DATE OF ACCEPTANCE	

SHEET
A3.1

ELECTRICAL DESIGN NOTES (REF IRC PART VIII)

*ALL ELECTRICAL SYSTEMS & COMPONENTS TO BE INSTALLED BY LICENSED PROFESSIONAL

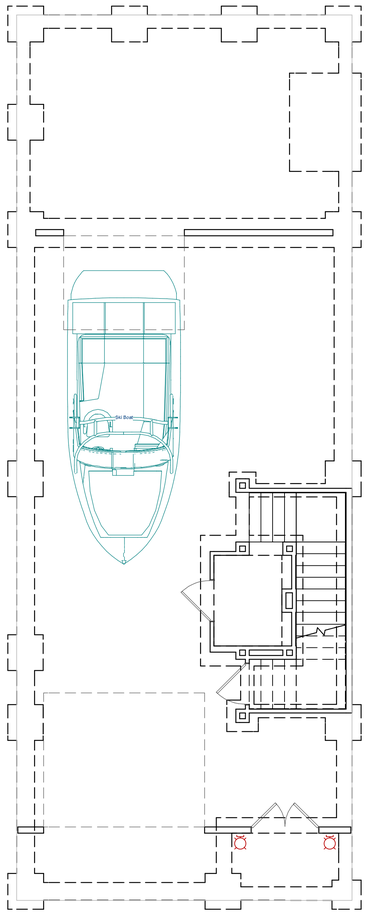

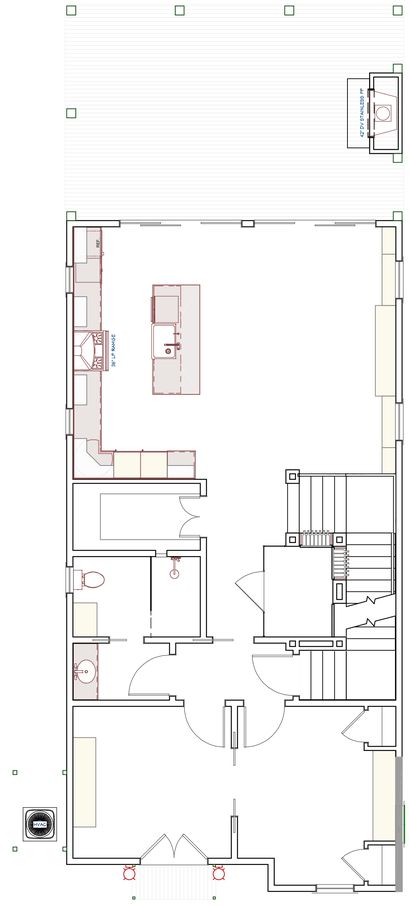

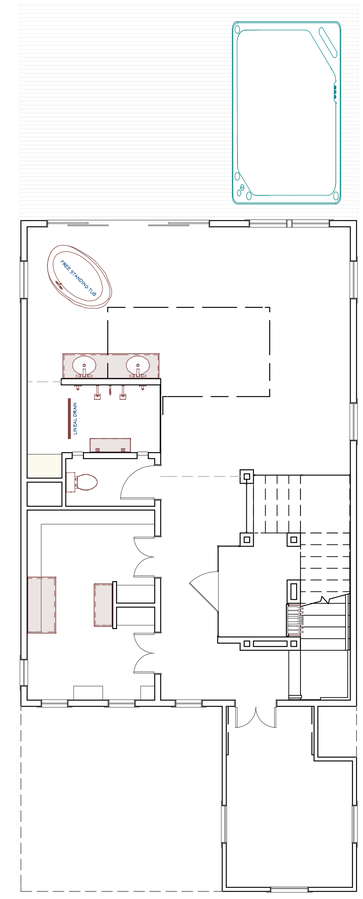

ELECTRICAL PLAN

SCALE 3/16" = 1' - 0"

MEMBER
AIBD
AMERICAN INSTITUTE of BUILDING DESIGN

BRIDGEWATER CONSULTING LLC
145 DATAW DRIVE
BEAUFORT, SOUTH CAROLINA 29920
www.homesbybridgewater.com
(843) 422-7778

RESIDENTIAL DESIGN for MR. & MRS. CUNNINGHAM
LOT 4 COTTAGES AT FACTORY CREEK MARINA
106 FACTORY CREEK

HOMEOWNER SIGNATURE & DATE OF ACCEPTANCE	REVISION DATE
	1/16/2019

SHEET
E1.1

HVAC DESIGN NOTES (REF IRC 2015 PART V)

IT IS THE RECOMMENDATION OF BRIDGEWATER CONSULTING LLC THAT OUR CLIENTS USE AN INDEPENDENT MECHANICAL DESIGN SERVICE. IF THE CLIENT CHOOSES TO FORGO THE USE OF AN INDEPENDENT MECHANICAL DESIGN SERVICE, THE CLIENT SHALL INDEMNIFY BRIDGEWATER CONSULTING LLC (AND ITS OWNERS/OFFICERS/EMPLOYEES) FROM AND AGAINST ALL ALLEGATIONS, CLAIMS, ACTIONS, SUITS, DEMANDS, DAMAGES, LIABILITIES, OBLIGATIONS, LOSSES, SETTLEMENTS AND JUDGMENTS RESULTING FROM A FAILURE OF ANY FUTURE HVAC SYSTEM (TO INCLUDE DESIGN & INSTALLATION) AND ANY COLLATERAL DAMAGE INCURRED AS A RESULT.

**THE HVAC SHEETS (AND ALL M1.x LABELED SHEETS) ARE PROVIDED ONLY FOR FUTURE USE BY THE HVAC DESIGN SERVICE AND/OR HVAC CONTRACTOR AND ARE NOT PART OF THE CONTRACTUAL DESIGN AGREEMENT.*

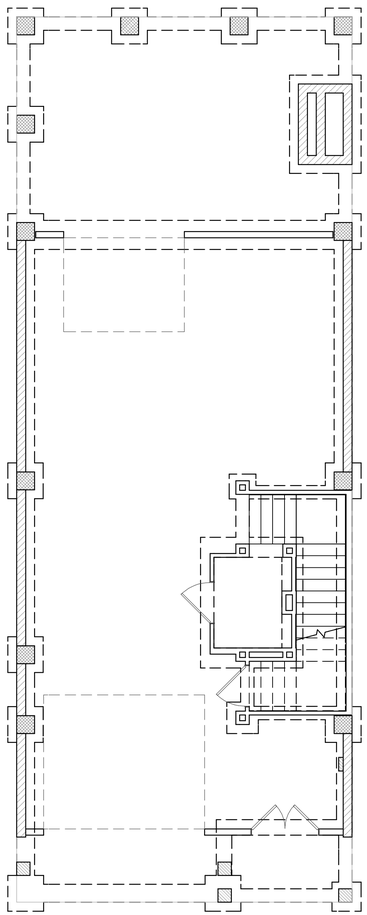

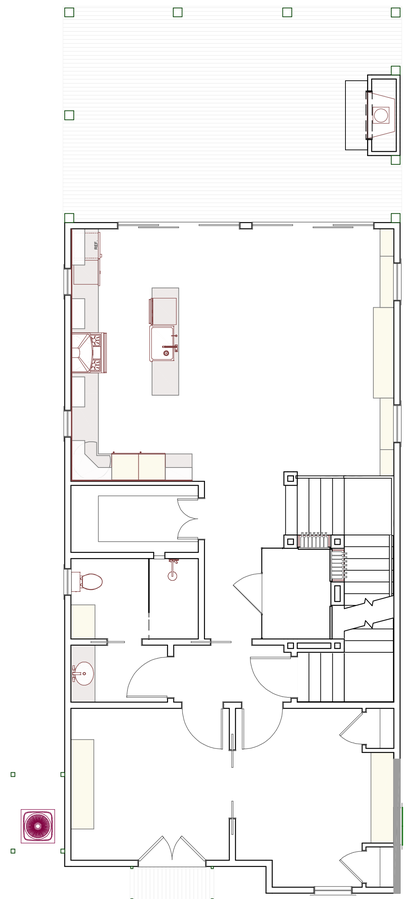

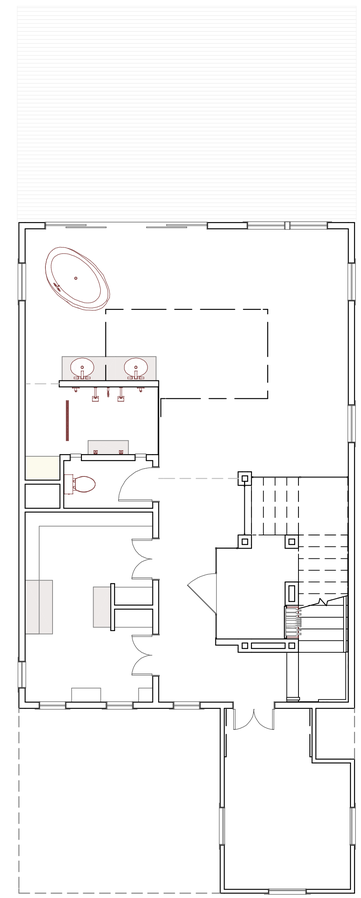

HVAC PLAN

SCALE 3/16" = 1' - 0"

MEMBER AIBD AMERICAN INSTITUTE of BUILDING DESIGN

BRIDGEWATER CONSULTING LLC
145 DATAW DRIVE
BEAUFORT, SOUTH CAROLINA 29920
www.homesbybridgewater.com
(843) 422-7778

RESIDENTIAL DESIGN for MR. & MRS. CUNNINGHAM
LOT 4 COTTAGES AT FACTORY CREEK MARINA
106 FACTORY CREEK

REVISION DATE	1/16/2019
HOMEOWNER SIGNATURE & DATE OF ACCEPTANCE	

SHEET

M1.1

PLUMBING DESIGN NOTES (REF IRC PART VI & VII)

IT IS THE RECOMMENDATION OF BRIDGEWATER CONSULTING LLC THAT OUR CLIENTS USE AN INDEPENDENT MECHANICAL DESIGN SERVICE. IF THE CLIENT CHOOSES TO FORGO THE USE OF AN INDEPENDENT MECHANICAL DESIGN SERVICE, THE CLIENT SHALL INDEMNIFY BRIDGEWATER CONSULTING LLC (AND ITS OWNERS/OFFICERS/EMPLOYEES) FROM AND AGAINST ALL ALLEGATIONS, CLAIMS, ACTIONS, SUITS, DEMANDS, DAMAGES, LIABILITIES, OBLIGATIONS, LOSSES, SETTLEMENTS AND JUDGMENTS RESULTING FROM A FAILURE OF ANY FUTURE HVAC SYSTEM (TO INCLUDE DESIGN & INSTALLATION) AND ANY COLLATERAL DAMAGE INCURRED AS A RESULT.

THE PLUMBING SHEETS (AND ALL M2.x LABELED SHEETS) ARE PROVIDED ONLY FOR FUTURE USE BY THE PLUMBING DESIGN SERVICE AND/OR PLUMBING CONTRACTOR AND ARE NOT PART OF THE CONTRACTUAL DESIGN AGREEMENT.

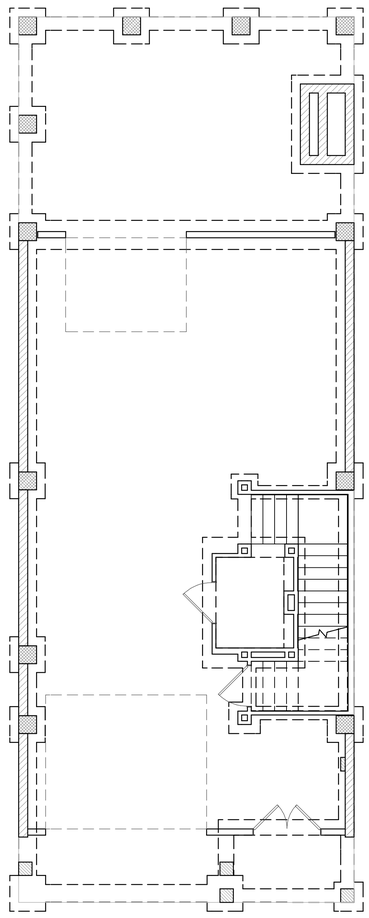

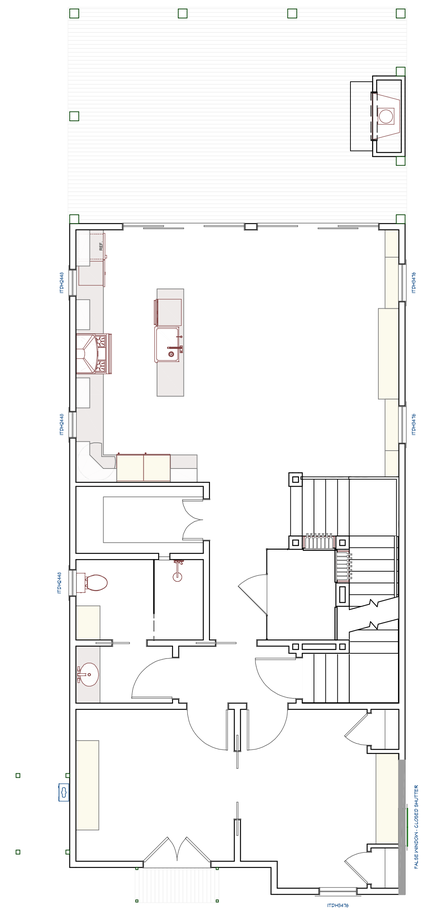

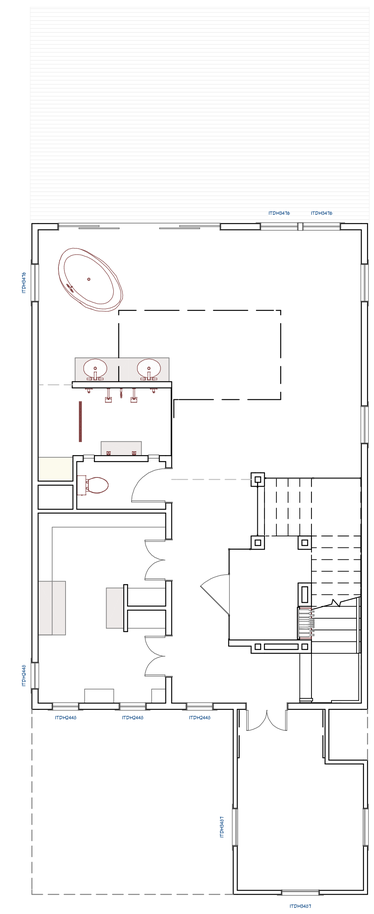

PLUMBING PLAN

SCALE 3/16" = 1' - 0"

MEMBER AIBD AMERICAN INSTITUTE of BUILDING DESIGN

BRIDGEWATER CONSULTING LLC
145 DATAW DRIVE
BEAUFORT, SOUTH CAROLINA 29920
www.homesbybridgewater.com
(843) 422-7778

RESIDENTIAL DESIGN for MR. & MRS. CUNNINGHAM
LOT 4 COTTAGES AT FACTORY CREEK MARINA
106 FACTORY CREEK

REVISION DATE	1/16/2019
HOMEOWNER SIGNATURE & DATE OF ACCEPTANCE	

SHEET
M2.1

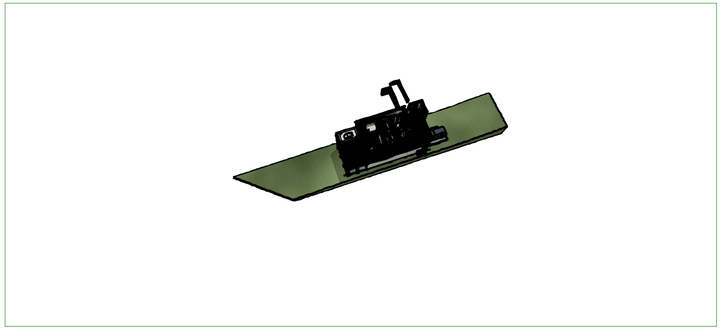

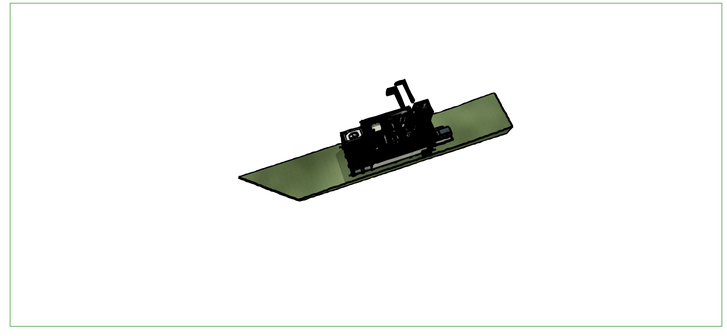

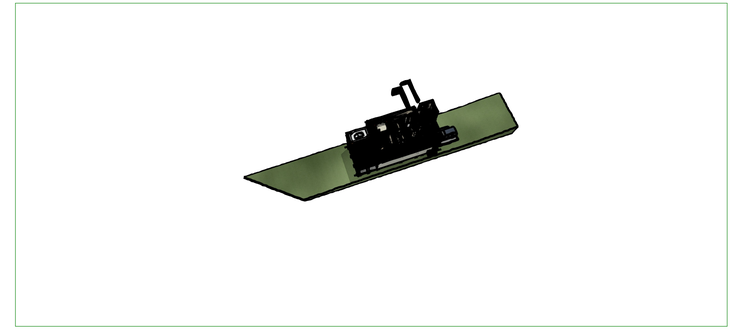

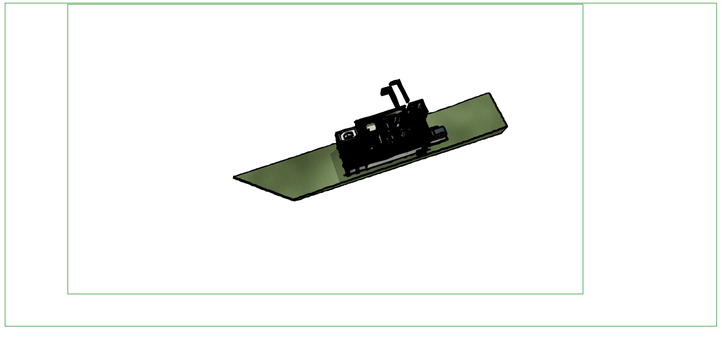

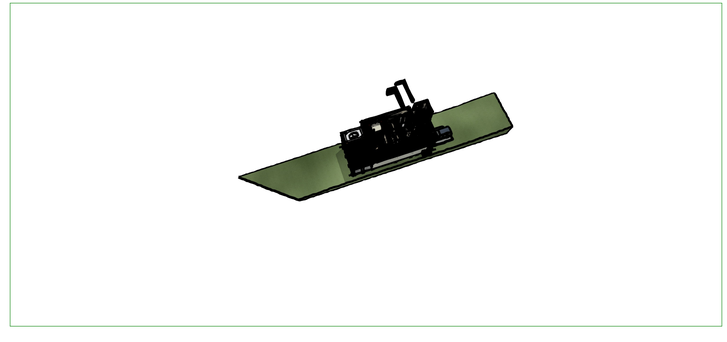

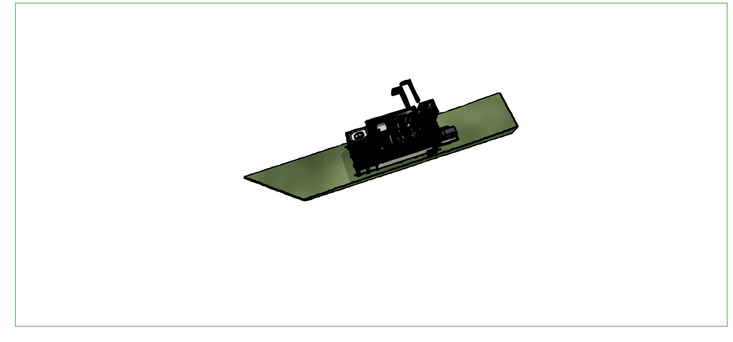

PROJECT RENDERING

NOT TO SCALE

*THIS IS A CONCEPT ONLY, NOT MEANT AS CONSTRUCTION DRAWINGS

MEMBER
AIBD
AMERICAN INSTITUTE of BUILDING DESIGN

BRIDGEWATER CONSULTING LLC
145 DATAW DRIVE
BEAUFORT, SOUTH CAROLINA 29920
www.homesbybridgewater.com
(843) 422-7778

RESIDENTIAL DESIGN for MR. & MRS. CUNNINGHAM
LOT 4 COTTAGES AT FACTORY CREEK MARINA
106 FACTORY CREEK

HOMEOWNER SIGNATURE & DATE OF ACCEPTANCE	REVISION DATE
	1/16/2019

SHEET
REND