NOTES-06/19/16

To client-

- panels on wall cabinets changed to door and frame from Wainscot
- Fridge surround simplified
- Hood adjusted to fit blower and meet code
- Pipe Chase added to allow vent out-contractor preferred this to venting in mud room
- Top rails of wall cabinets extended to accommodate change to inset cabinet and allow molding application

Installer-

- All Cabinets to be set plumb and level
- Shims to fill any gap at screws and connectors- do not deform cabinet
- Do not over torque screws
- INSET CABINETS- check door clearance PRIOR to installation. IF any issues report immediately, otherwise door clearance issues will be considered an installation issue.
- Mud room cabinets may need to be scribed if floor runs out more than scribe allowed for brackets

ABOUT THIS PROJECT
Worked from scratch with client and builder.

This FILE includes hyper links and bookmarks which can be added to any PDF as needed and work fine in Adobe reader. The links are in the Layout Page Table. I made them visible but that is not needed. Every other page has a link at the bottom right corner to return to the first page.

The Cabinet Map Page has images embedded into the Notes. These will not work in Adobe. They require using the free Bluebeam PDF viewer found here for windows
https://www.bluebeam.com/solutions/vu

or here for I Pad
https://www.bluebeam.com/solutions/vu-ipad

Click the small square below the note to pop up the image. The images used here are from other projects. Any image can be inserted as needed.

The Note on the left side of the island has two images -use the arrows.
The other two notes have images that were created in Chief Architect. In the program those can cabinets can be opened and closed at will (live) and the inserts will show and open.

Layout Page Table

Number	Title	Comments
1	Page Index & Overall Notes	
2	Cabinet Schedules	
3	Keyed Cabinet Plan	Cabinet placement & Fixture Centers
4	Cabinet Map	Note Counter Overhangs at Sides, overall run listed
5	Elevations-E1; E2; E3; E4	Window and Range Wall- Vertical placement given; Island Side and Front; NOTE side panels on walls and bases
6	Elevations E5; E6: Island/Fridge Details	E-5 Fridge;DRY FIT fridge with appliance before installing caibnets; Fridge Molding Detail; E-6 Mud Room -Vertical placement listed
7	Molding; Hardware Drilling; RPS Details	Molding for both rooms, RPS rail alignments, Drilling Diagram
8	Wall Cabinet; Pipe Chase, Details	Valance drawing
9	Sink Cabinet Detail, Hardware Drilling	
10	Hood Details; Bracket Detail	See NOTES re: bracket instalation
11	Perspectives Kitchen	
12	Perspectives Mud Room	Includes close up of bracket and molding
13	Demo & Construction Plan w/Notes	
14	Electric Plan	Electric locations TBD as of 06/19/16
15	Demo & Construction 1/2" scale (Dup)	
16	Dining Room Bracket, Mold, Step Detail	
17	Light Spread	
18	LED in & under cabinet	

K-1

DATE: 7/5/2016

SCALE:

Page Index & Overall Notes

Designers of fine kitchen, baths, and built-ins.
199 Rt. 299, Suite 103,
Highland, NY 12528
(845)834-3047
Mark James &Co.

KITCHEN BASE CABINET SCHEDULE-FRAMELESS; CRP-10 REGULAR, REVERSE G; WHITE 10 SHEEN							
NUMBER	QTY	LABEL	SIDES	MODS	WIDTH	HEIGHT	DEPTH
B01	1	LSQ36		DO NOT DRILL FOR HARDWARE	36 "	34 1/2 "	36 "
B02	1	SBDD 36	R	HAFELE 547.91.703 – UNDERSINK MAT; FLSHENDB R; BLIND RIGHT 12" WITH APPLIED DOOR-SEE DWG	36 "	34 1/2 "	24 "
B03	1	4DB29 3/4	L&R	FLSHENDB-L; FULL RAILS ON DEEP DRAWER; ADJUSTABLE DRAWER DIVIDERS BOTTOM DRAWER ONLY	29 3/4 "	34 1/2 "	24 "
B04	1	3/4 RPW 24 7/8		FINISH BOTH TALL EDGES AND 1-1/2" OF BACK EDGE-USED AS EXTENDED END PANEL-SEE DRAWING	24 7/8 "	34 1/2 "	3/4 "
B05	1	B15	L	RAS 5349-1527DM-2 ;FLSHENDB L; ONLY DRILL DRAWER FOR HARDWARE NOT DOOR	15 "	34 1/2 "	24 "
B06	1	B21	L&R	FLSHENDB – RIGHT ;NSPO HELD UP TO 17" ; 4-REV-A-SHELF 597-12-CR ; FDS AT 13-1/2" SEE DWG	21 "	34 1/2 "	24 "
B07	1	3/4 RPW 24 7/8		FINISH BOTH TALL EDGES AND 1-1/2" OF BACK EDGE-USED AS EXTENDED END PANEL-SEE DRAWING	24 7/8 "	34 1/2 "	3/4 "
B08	1	B18	R	DECDB – DECREASE DEPTH TO 18" ;WAINSIDE B24 RIGHT, AS DRAWN; ATTACH DOOR TO NDPO ; NSPO; COMBSTRL WITH #09-SEE DRAWING; ONLY DRILL DRAWER FOR HARDWARE NOT DOOR	18 "	34 1/2 "	18 "
B09	1	3DB34 1/2	L	DECDB – DECREASE DEPTH TO 18" ; 4-1/4" H ADJUSTABLE DRAWER DIVIDERS BOTH BOTTOM DRWRS ; COMBSTRL WITH #08-SEE DRAWING	34 1/2 "	34 1/2 "	18 "
B10	1	3/4" RPW 19 5/8	ACCES SORY 1	FINISH FRONT EDGE AND 2" ON BACK FROM FRONT EDGE, ATTACH TO #9, MITER AND JOIN TO FINISH BACK #12-SEE DRAWING	19 5/8 "	34 1/2 "	3/4 "
B11	1	3/4" RPW 19 5/8		FINISH FRONT EDGE AND 2" ON BACK FROM FRONT EDGE, ATTACH TO #8; MITER AND JOIN TO FINISH BACK #12-SEE DRAWING	19 5/8 "	34 1/2 "	3/4 "
B12	1	FINBACK 3/4 -WAINSCOTT		FOR ENTIRE BACK OF COMBINED #8.9.10.11 SHIPS AS ONE UNIT	54 "	34 1/2 "	3/4 "
B13	1	2 PCS POST 3-1/2 X 3-1/2 X 34-1/2			3 1/2 "	34 1/2 "	3 1/2 "
B14	1	WAPRIN 8FT			8 7/16 "	1/8 "	5 7/16 "
B15	1	SSLE 3/8-2-1/4" X 96" OGEE EDGE			8 7/16 "	1/8 "	5 7/16 "
B16	1	1001-08			8 7/16 "	1/8 "	5 7/16 "
B17	1	2 PCS-SS 3/4-1 1/2 X 54			48 "	1 1/2 "	3/4 "
B18	1	W4816-24		INCDW – 24 ;REV-A-SHELF 597-12-CR - 4 DIVIDERS ONLY -RIGHT SIDE ONLY, LEFT SIDE BLANK-DO NOT DRILL THIS CABINET FOR HARDWARE	48 "	16 "	24 "
B19	1	2 PCS-SS 3/4-1 1/2" X 96		FINISH BOTH FACES AND BOTH LONG EDGES	1 1/2 "	96 "	3/4 "
B20	1	2 PC SS 3/4-7 X 96		FINISH BOTH FACES AND BOTH LONG EDGES	6 15/16 "	96 "	3/4 "
B21	1	2 PC SS 3/4-6 X 96		FINISH BOTH FACES AND BOTH LONG EDGES	3/4 "	96 "	6 "
B22	1	3 PCS BB BEADED 381-08 X 1/2"			8 7/16 "	1/8 "	5 7/16 "
B23	1	24 FT TOE			8 7/16 "	1/8 "	5 7/16 "
B24	1	2-8FT SCRIBE LG			8 7/16 "	1/8 "	5 7/16 "
B25	1	TUKIT			8 7/16 "	1/8 "	5 7/16 "

KITCHEN WALL CABINET SCHEDULE-INSET, CRP-10 REGULAR, REVERSE G; WHITE 10 SHEEN							
NUMBER	QTY	LABEL	SIDES	MODS	WIDTH	HEIGHT	DEPTH
W01	1	BCW 2436-13	R	REL-STL; FLSHENDW R, PREP FOR GLASS, ANTIQUE GLASS, SI, EXTTR 2" TOP AND RIGHT FINISHED;	24 "	36 "	13 "
W02	1	VALARP		EXTTR2 MAKING FINAL HEIGHT 14-1/2" OL	46 1/2 "	14 1/2 "	3/4 "
W03	1	1/2" PLY 48" X 10-1/2"			48 "	1/2 "	10 1/2 "
W04	1	XXW 55 3/4-36-13	L&R	REL-STL; EXTTR2 ; WAINSIDEW 36 R; PREP FOR GLASS LEFT DOOR, ANTIQUE GLASS, SI, SEE DRAWING	55 3/4 "	36 "	13 "
W05	1	W32 1/236	L	FLSHENDW L ;REL-STL (UNEQUAL DOORS, LEFT DOOR TO MATCH WIDTH OF 16-1/2" WIDE CAB); XSW 1" R, XTTR 2" TOP ONLY	32 1/2 "	36 "	13 "
W06	1	STANISCI J3930 W ARCH		SIZE TO FIT ZEPHYR AK9434AS SEE DRAWING	24 3/4 "	30 "	39 "
W07	1	W 17 1/4 36-13	L&R	FLSHENDW R; WAINSIDEW 36 LEFT-SEE DRAWINGS	17 1/4 "	36 "	13 "
W08	1	4 PCS BB COLONIAL-10-08			8 7/16 "	1/8 "	5 7/16 "
W09	1	5 PCS CROWN 24-08			8 7/16 "	1/8 "	5 7/16 "

BULTERS PANTRY CABINET SCHEDULE-FRAMELESS; CRP-10 REGULAR, REVERSE G; WHITE 10 SHEEN							
NUMBER	QTY	LABEL	SIDES	MODS	WIDTH	HEIGHT	DEPTH
BP01	1	BF 03		SHIP AT 3"; INCLUDE OVERLAY FILLER FINISHED 3 SIDES SHIP LOOSE.	1 "	30 1/2 "	3/4 "
BP02	1	XB44 1/4		REL-STL; DUMMY DRAWER LEFT SINK SECTION, HINGE LLR	44 1/4 "	34 1/2 "	21 "
BP03	1	3/4 RPW 21 7/8-30 1/2		FINISH FRONT EDGE AND 2" ON BACK FROM FRONT EDGE	21 7/8 "	30 1/2 "	3/4 "
BP04	1	B1 1/4		SHIP AT 3"; INCLUDE OVERLAY FILLER FINISHED 3 SIDES SHIP LOOSE.	1 1/4 "	30 1/2 "	3/4 "
BP05	1	B31 1/2			31 1/2 "	34 1/2 "	21 "
BP06	1	B31 1/2			31 1/2 "	34 1/2 "	21 "
BP07	1	B31 1/2			31 1/2 "	34 1/2 "	21 "
BP08	1	3/4 RPW 21 7/8 -30 1/2		FINISH FRONT EDGE AND 2" ON BACK FROM FRONT EDGE	21 7/8 "	30 1/2 "	3/4 "
BP09	1	VALANCE LEFT			3/4 "	3 1/4 "	7 "
BP11	1	BRACKET RIGHT			9 3/4 "	3 1/4 "	5 1/2 "
BP12	1	VALANCE LEFT			3/4 "	3 1/4 "	6 1/2 "
BP13	1	2 PCS BTM 1439-08			8 7/16 "	1/8 "	5 7/16 "
BP14	1	BB COLONIAL-10-08			8 7/16 "	1/8 "	5 7/16 "
BP15	1	CROWN 2-5/8"			8 7/16 "	1/8 "	5 7/16 "

WINE BAR WALL CABINETS- INSET; CRP-10 REGULAR, REVERSE G; WHITE 10 SHEEN							
NUMBER	QTY	LABEL	SIDES	MODS	WIDTH	HEIGHT	DEPTH
SB01	1	XW45-34 7/16	R	REL-STL; SI ;MULLION GLASS ;GLASS ;FRAMENDW 36 R; XTTR 2" TOP AND RIGHT FINISHED SIDE	45 "	34 7/16 "	13 "

K-2

DATE: 7/5/2016

SCALE:

Cabinet Schedules

Designers of fine kitchen, baths, and built-ins.
199 Rt. 299, Suite 103,
Highland, NY 12528
(845)834-3047

Mark James &Co.

1st Floor

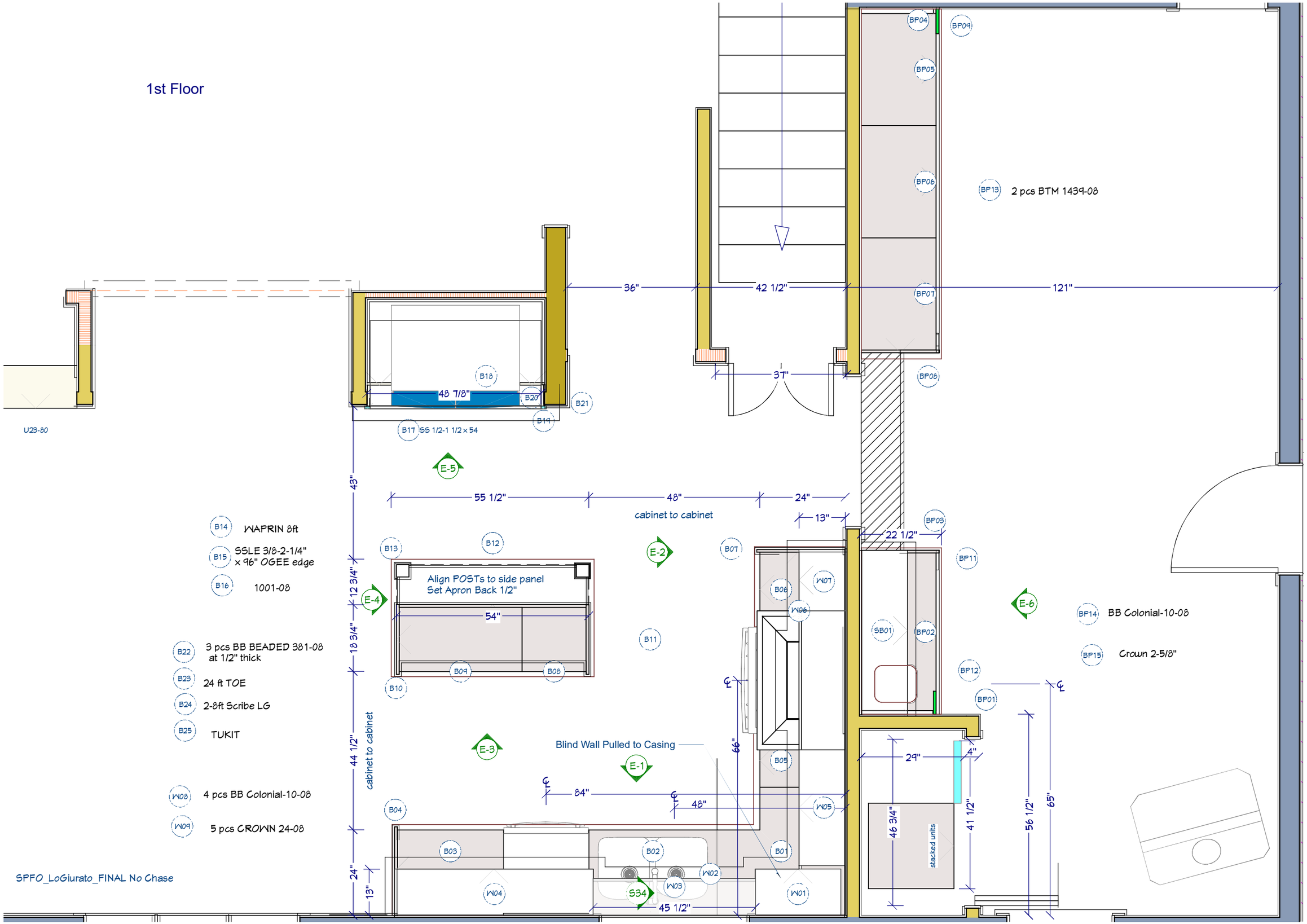

SPFO_LoGiurato_FINAL No Chase

K-3

DATE: 7/5/2016

SCALE:

Keyed Cabinet Plan

Designers of fine kitchen, baths, and built-ins.
199 Rt. 299, Suite 103,
Highland, NY 12528
(845)834-3047

Mark James &Co.

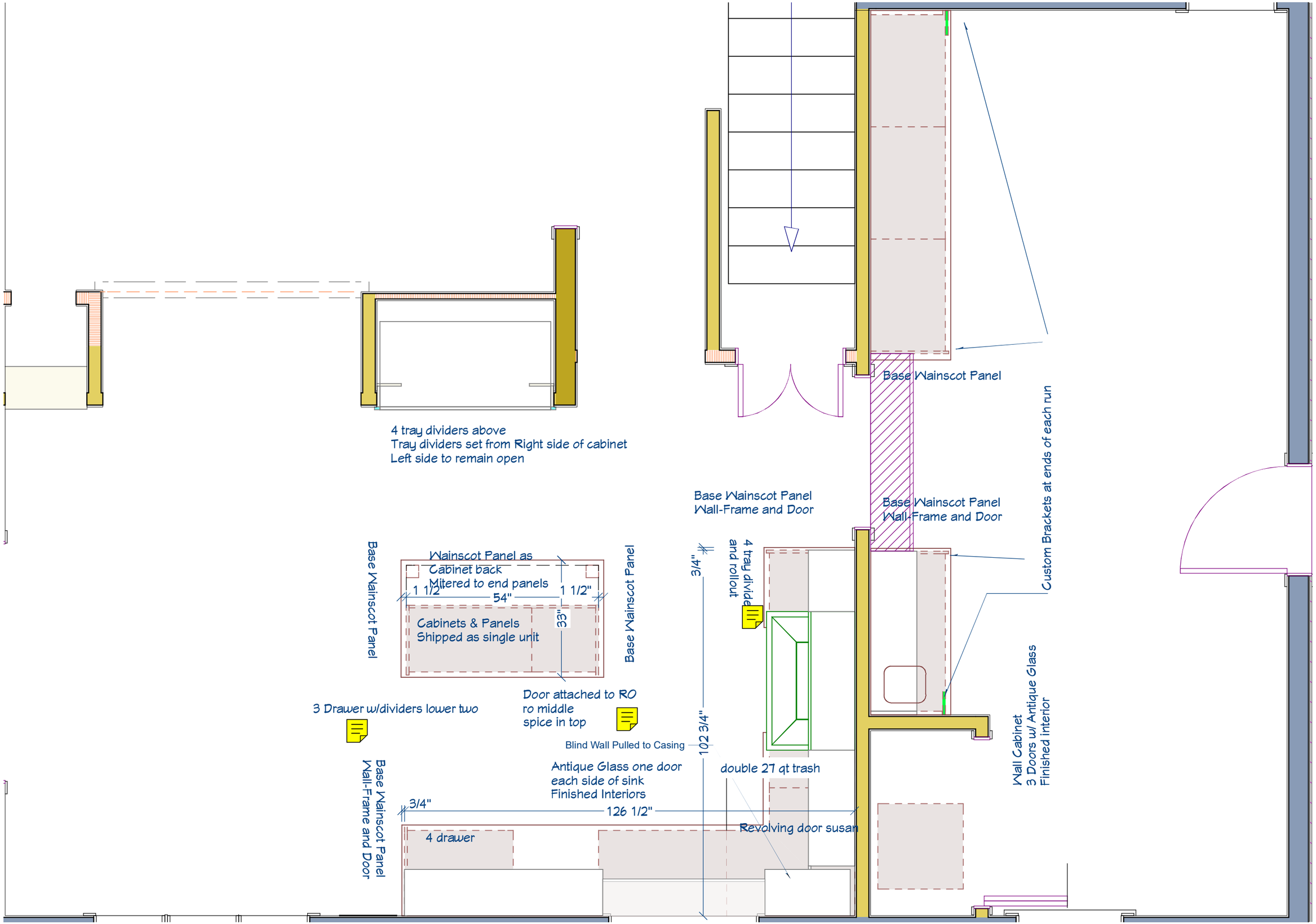

K-4

DATE: 7/5/2016

SCALE:

Cabinet Map

Designers of fine kitchen, baths, and built-ins.
199 Rt. 299, Suite 103,
Highland, NY 12528
(845)834-3047
Mark James &Co.

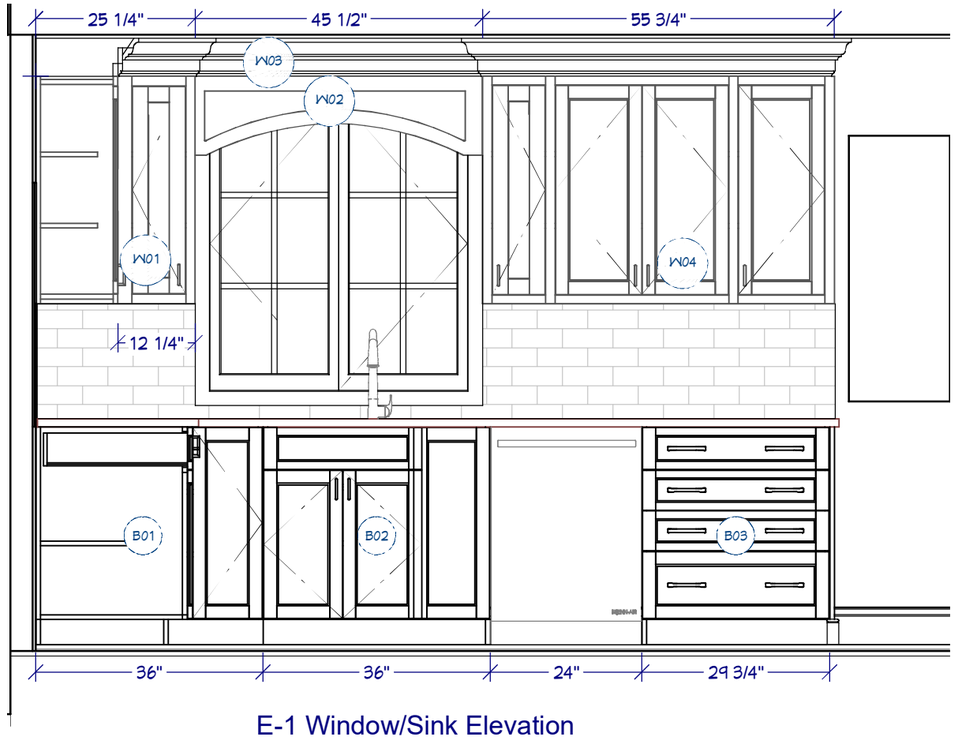

E-1 Window/Sink Elevation

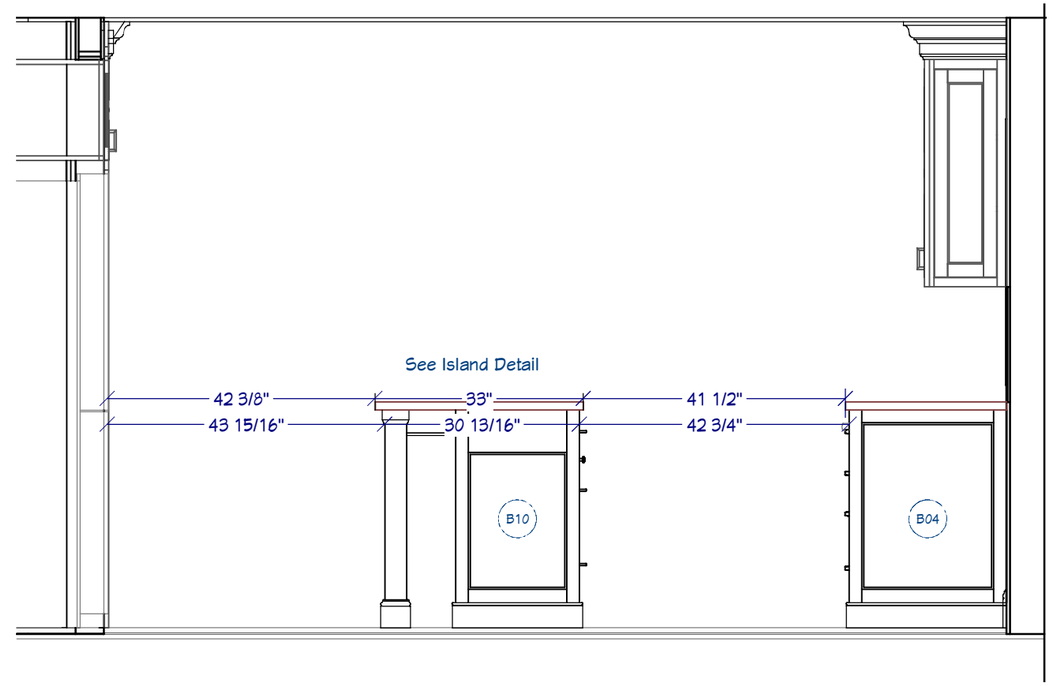

Elevaation E-4 From DR

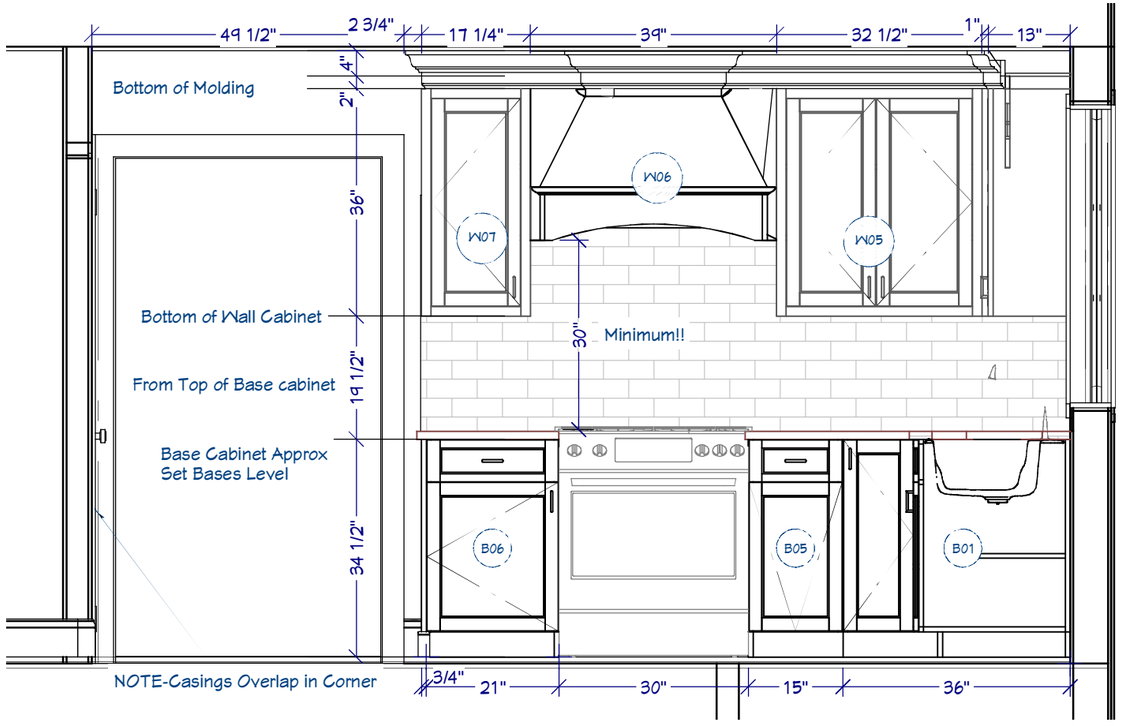

E-2 Range Wall Elevation

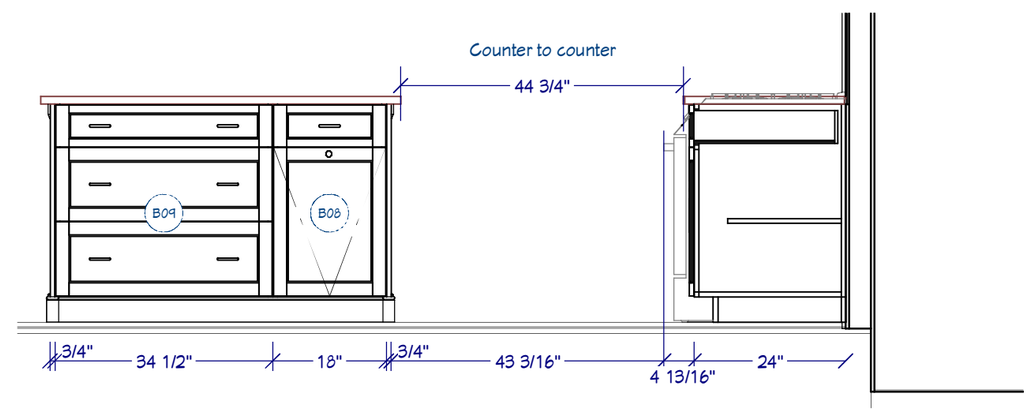

E-3 Island Front

K-5

DATE: 7/5/2016

SCALE:

Elevations-E1; E2; E3; E4

Designers of fine kitchen, baths, and built-ins.
199 Rt. 299, Suite 103,
Highland, NY 12528
(845)834-3047
Mark James &Co.

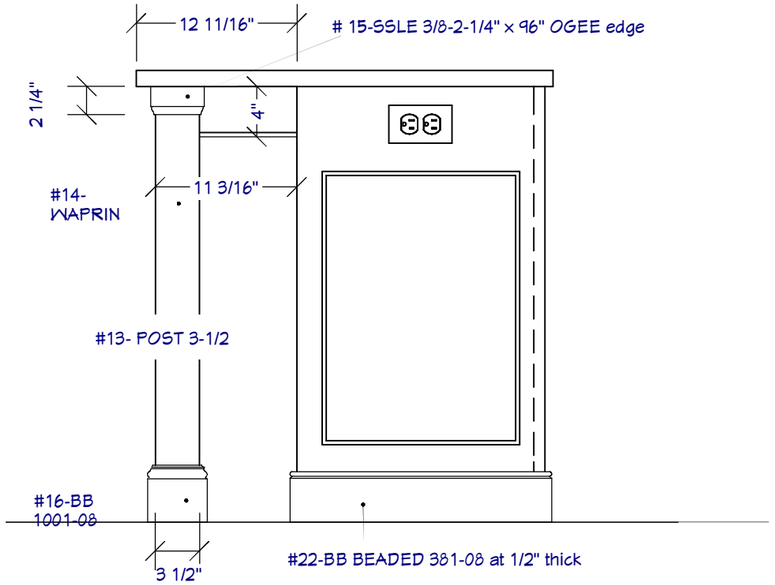

Island Detail

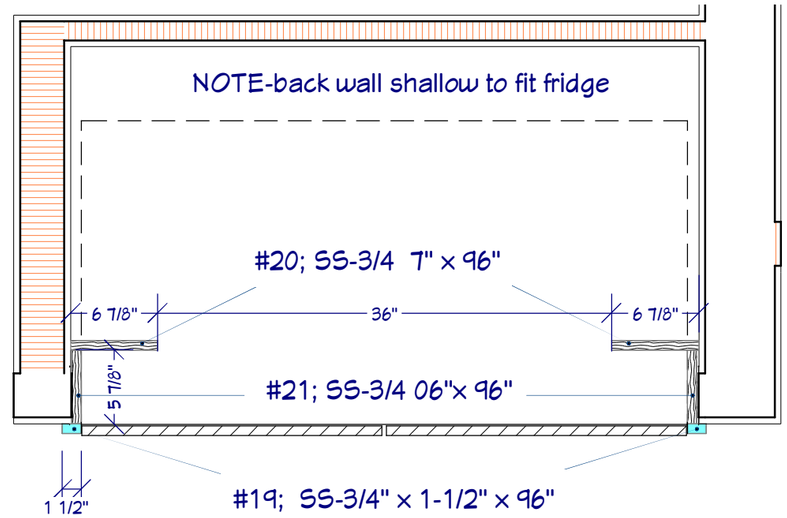

Fridge Surround Detail Plan View 1 in = 1 ft

Fridge to sit flush to trim -FIELD CHECK WITH APPLIANCE

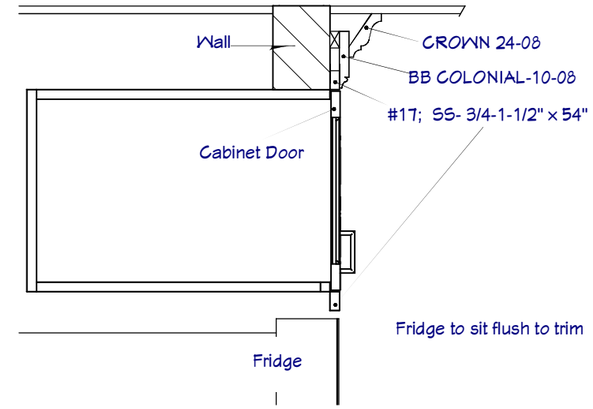

Fridge Molding Detail 1 in = 1 ft

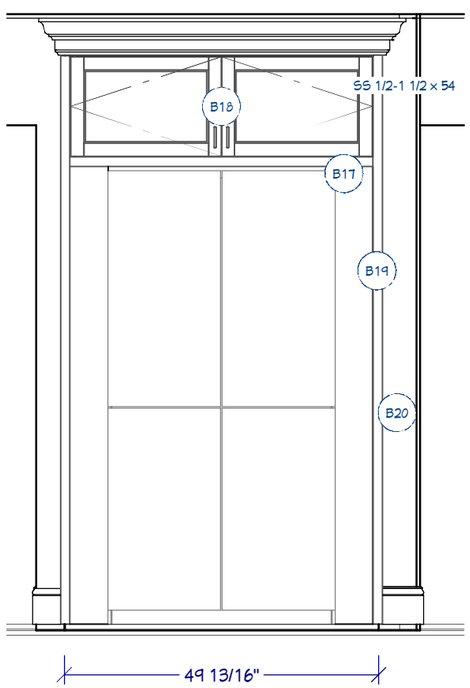

E-5 Fridge elevation

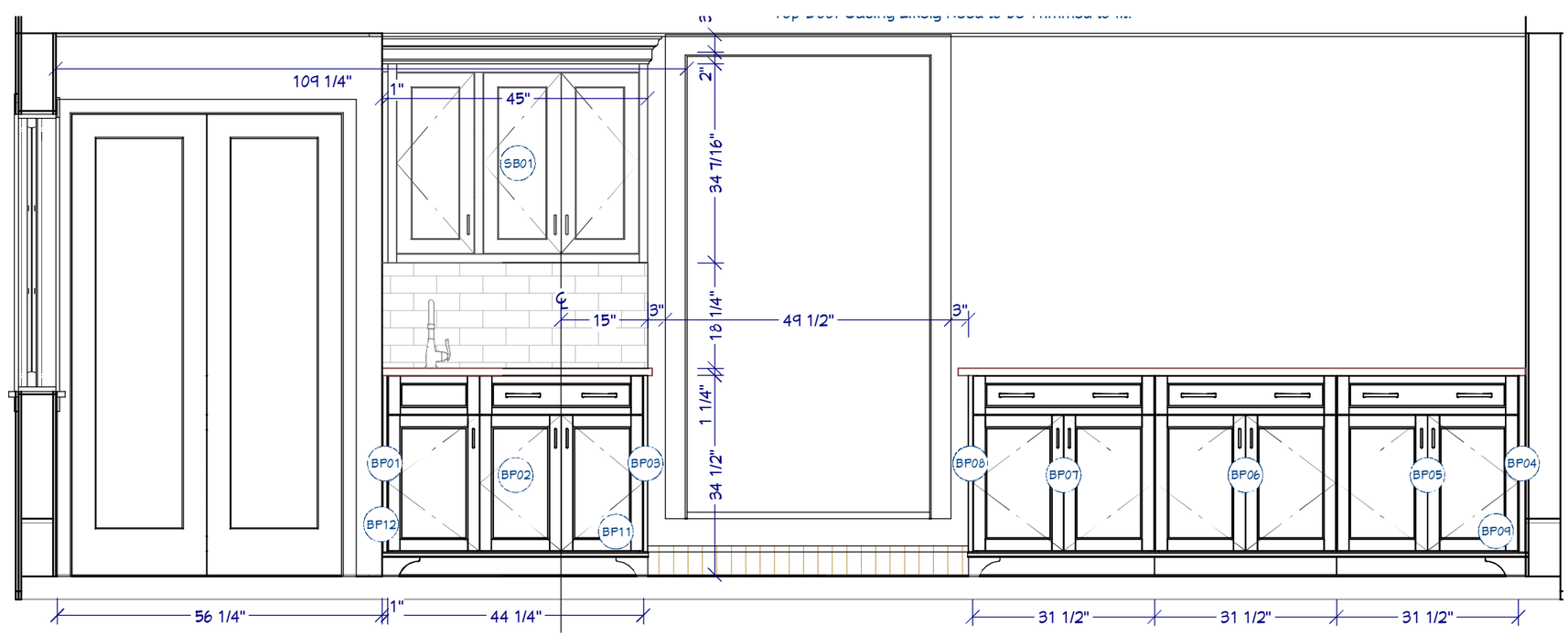

E-6 Mud Room Elevation

K-6

DATE: 7/5/2016

SCALE:

Elevations E5; E6: Island/Fridge Details

Designers of fine kitchen, baths, and built-ins.
199 Rt. 299, Suite 103,
Highland, NY 12528
(845)834-3047
Mark James &Co.

Modling Detail both rooms 1 1/2 in = 1 ft

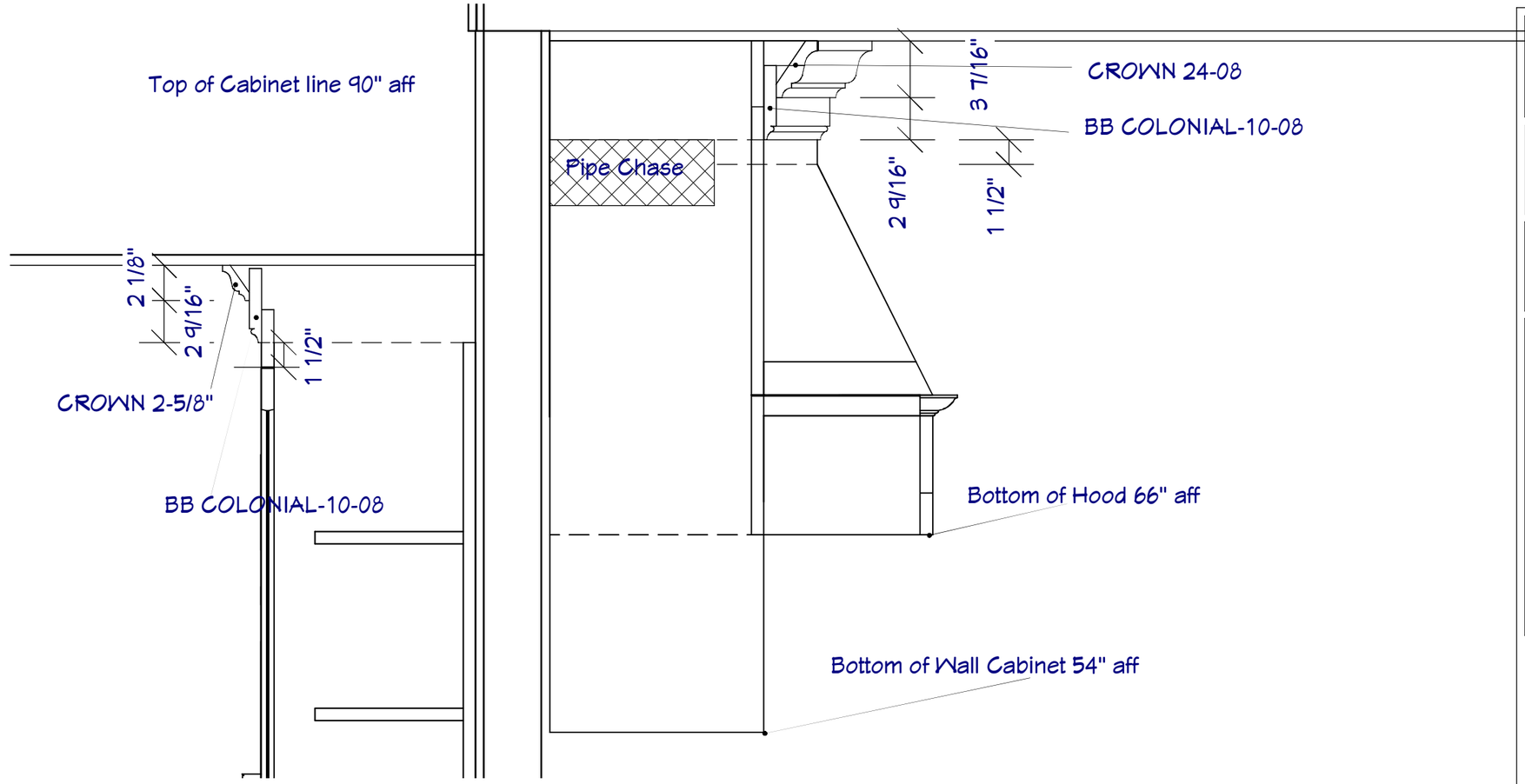

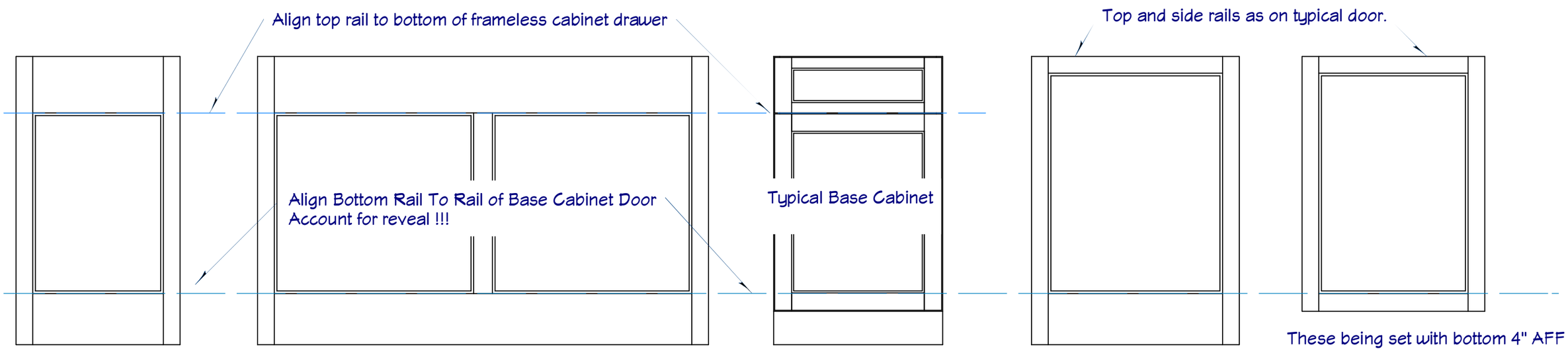

Island #'s 4 & 7;
3/4" RPW 24 7/8" x 34-1/2

#12; FINBACK3/4-Wainscot back of combined cabinet 8& 9

RPW panels

#'s 4 & 7;
3/4" RPW 24 7/8" x 34-1/2

Mud Base #'s BP3 & BP8;
3/4" RPW 21 7/8" x 30-1/2

K-7

DATE: 7/5/2016

SCALE:

Molding; Hardware
Drilling; RPS Details

Designers of fine kitchen, baths, and built-ins.
199 Rt. 299, Suite 103,
Highland, NY 12528
(845)834-3047
Mark James &Co.

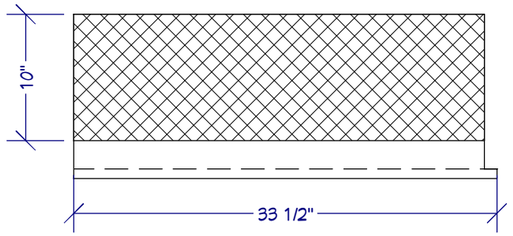

Top View

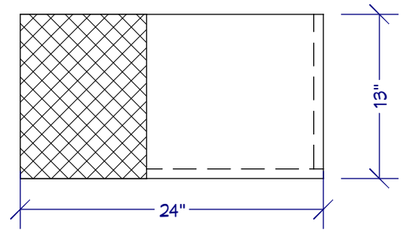

Top View

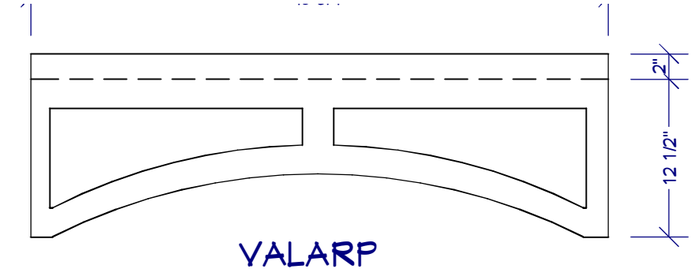

VALARP

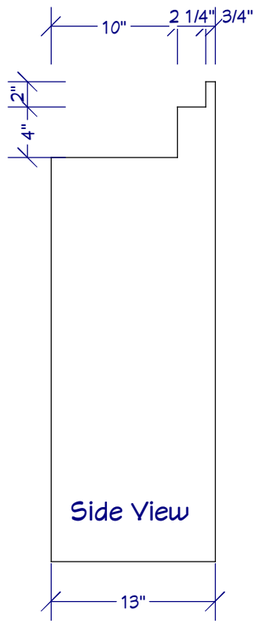

Side View

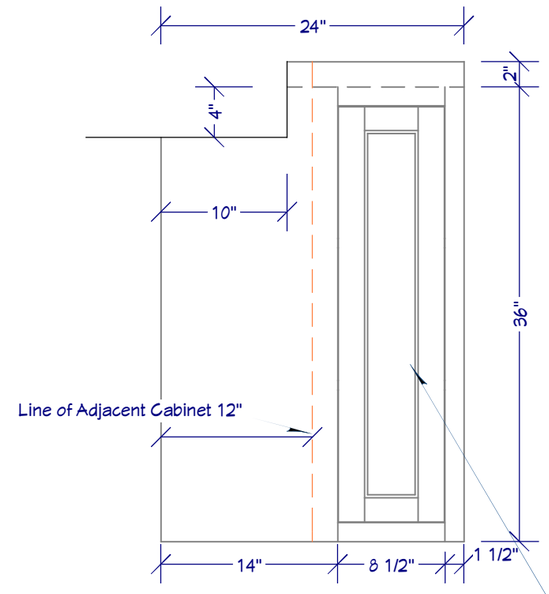

W01; BCW2436-13

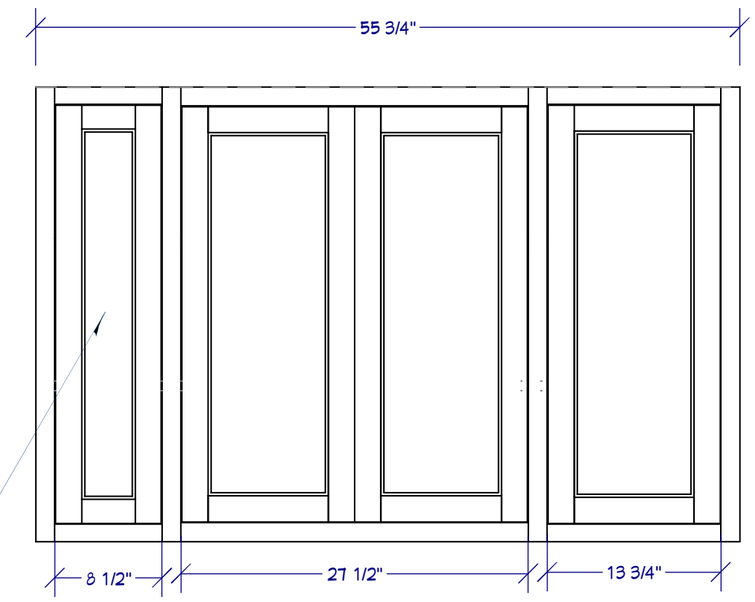

W04; W55-1/8 36-13

Doors Equal-prep for glass these two ONLY

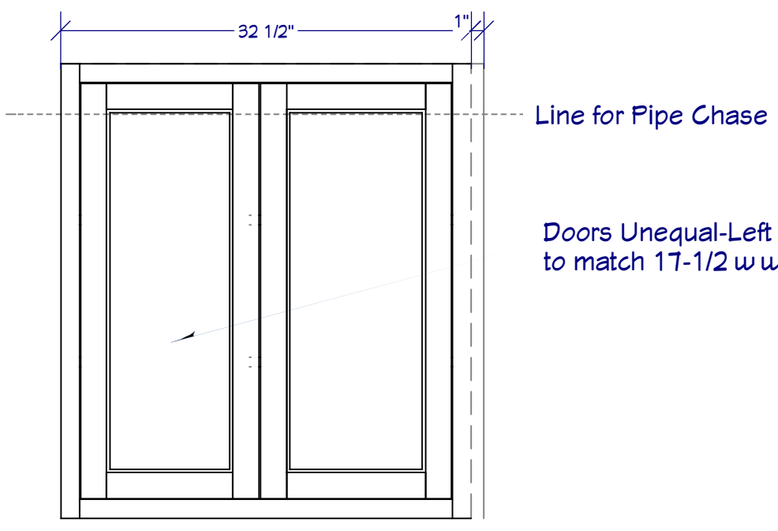

Doors Unequal-Left door
to match 17-1/2 w wall cabinet

W 05: W32.5 36-13

K-8

DATE: 7/5/2016

SCALE:

Wall Cabinet; Pipe Chase, Details

Designers of fine kitchen, baths, and built-ins.
199 Rt. 299, Suite 103,
Highland, NY 12528
(845)834-3047

Mark James &Co.

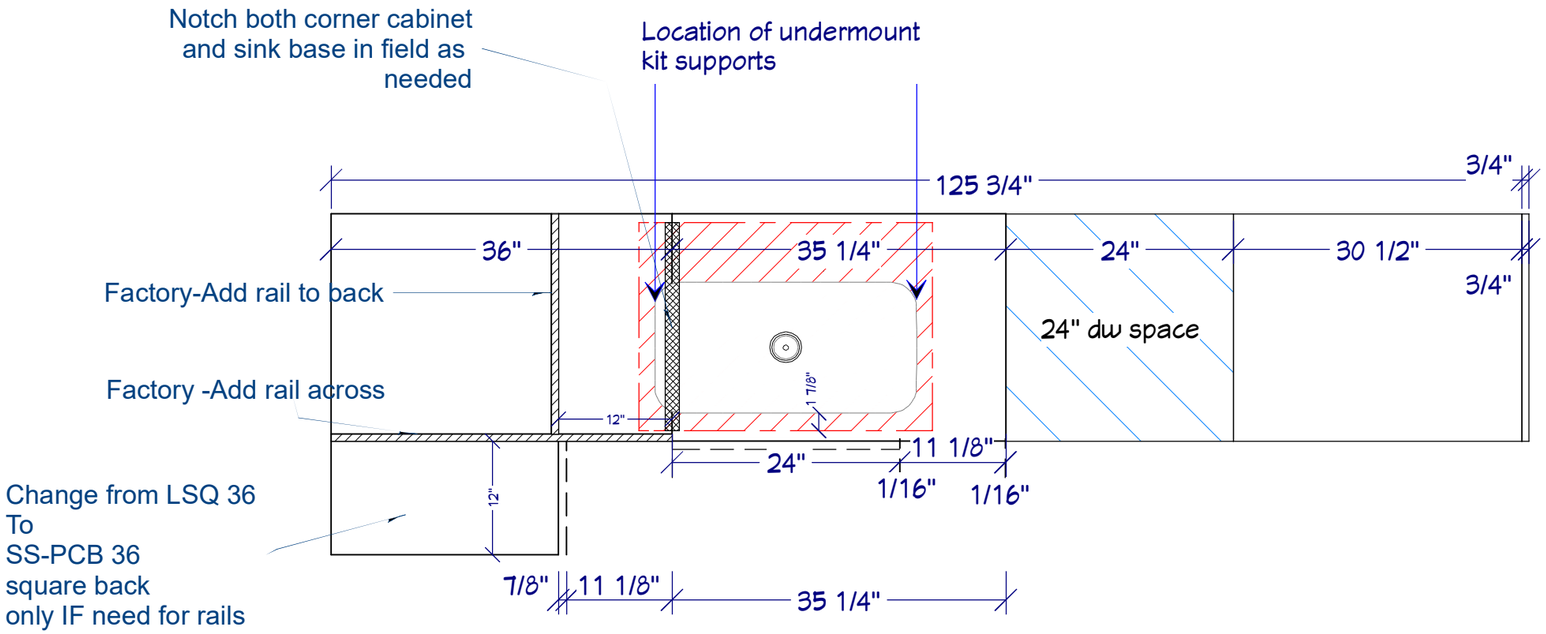

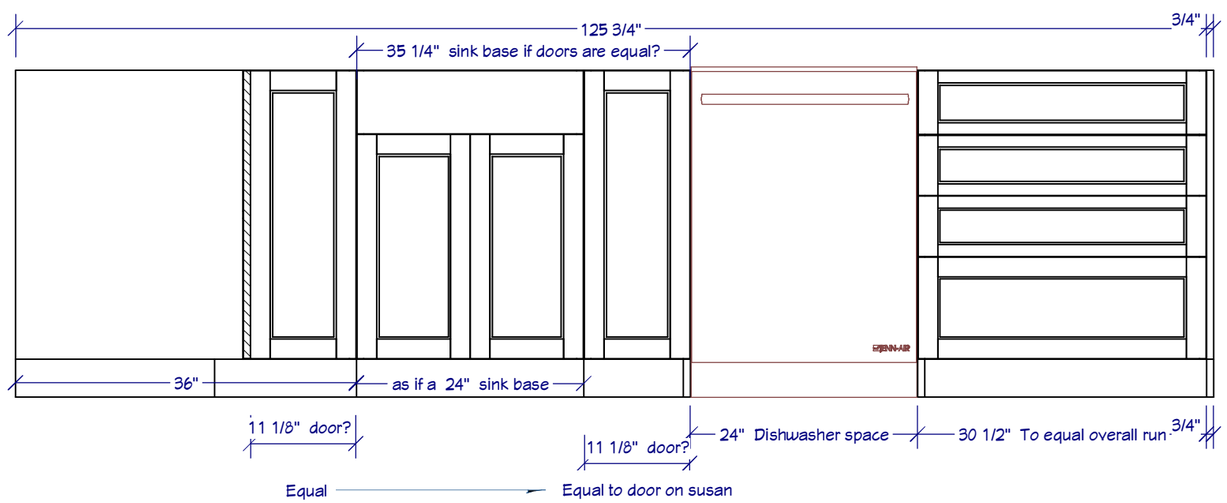

Sink and Corner Detail

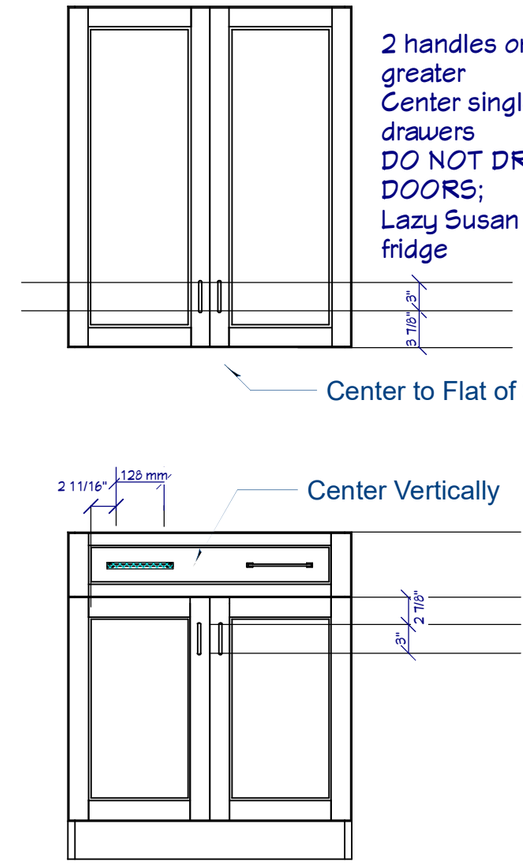

Hardware Drilling

K-9

DATE: 7/5/2016

SCALE:

Sink Cabinet Detail, Hardware Drilling

Designers of fine kitchen, baths, and built-ins.
199 Rt. 299, Suite 103,
Highland, NY 12528
(845)834-3047

Mark James &Co.

Angles and top dimension are for reference
Just wanted to make sure it worked-
consider dimension nominal if you need to.
The only important dimension is the height of the arch
And that it fits a Zephyr MonsoonDCBL-AK434AS

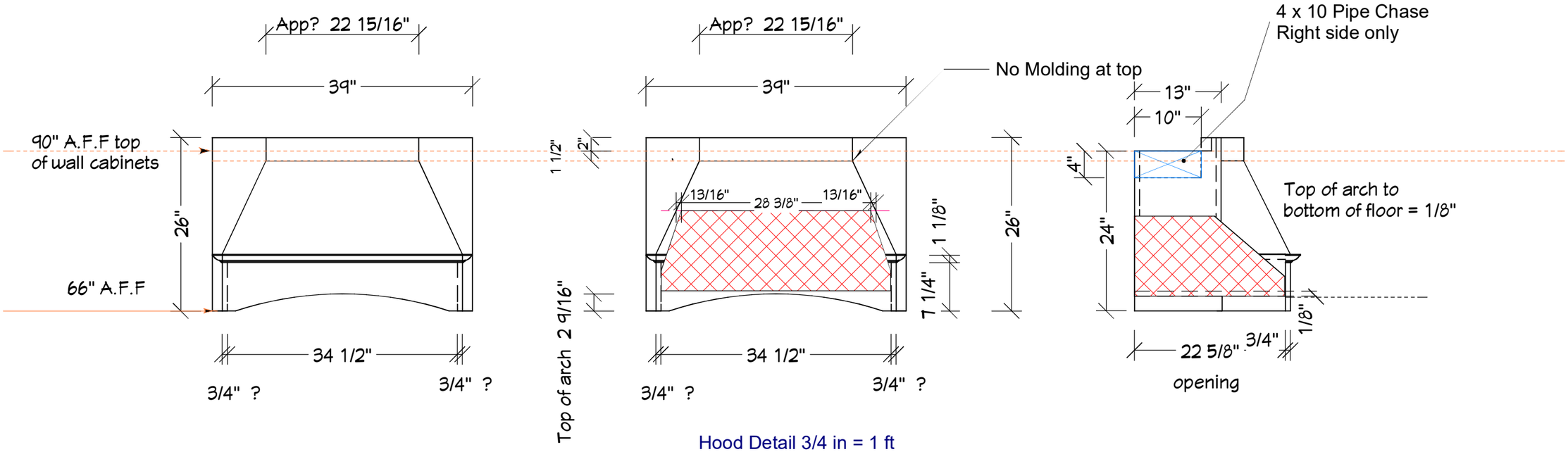

Hood Detail 3/4 in = 1 ft

Note-Combine total of Molding and Bracket Height is 1/4" Oversize to allow Scribe
Scribe from bottom-if deviation from level is greater then scribe base cabinets to compensate.

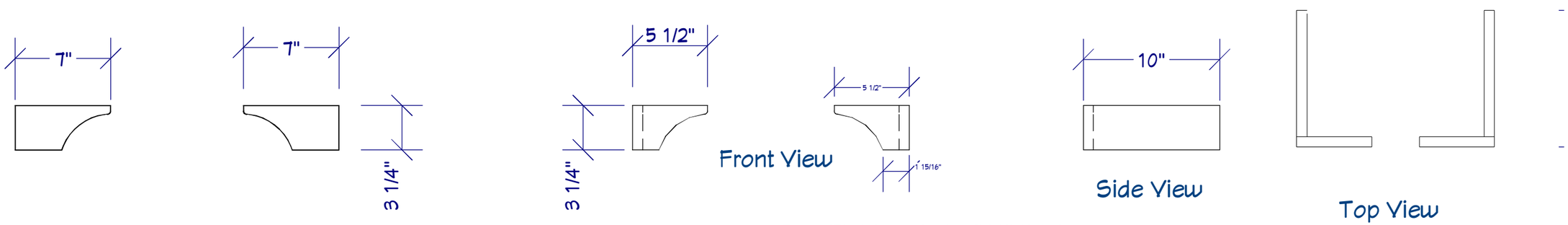

Two flat brackets-3/4" thick

Two Flat brackets-3/4" thick
with flat returns

Brackets for Side Board Detail 1 1/2 in = 1 ft

K-10

DATE: 7/5/2016

SCALE:

Hood Details;
Bracket Detail

Designers of fine kitchen, baths, and built-ins.
199 Rt. 299, Suite 103,
Highland, NY 12528
(845)834-3047
Mark James &Co.

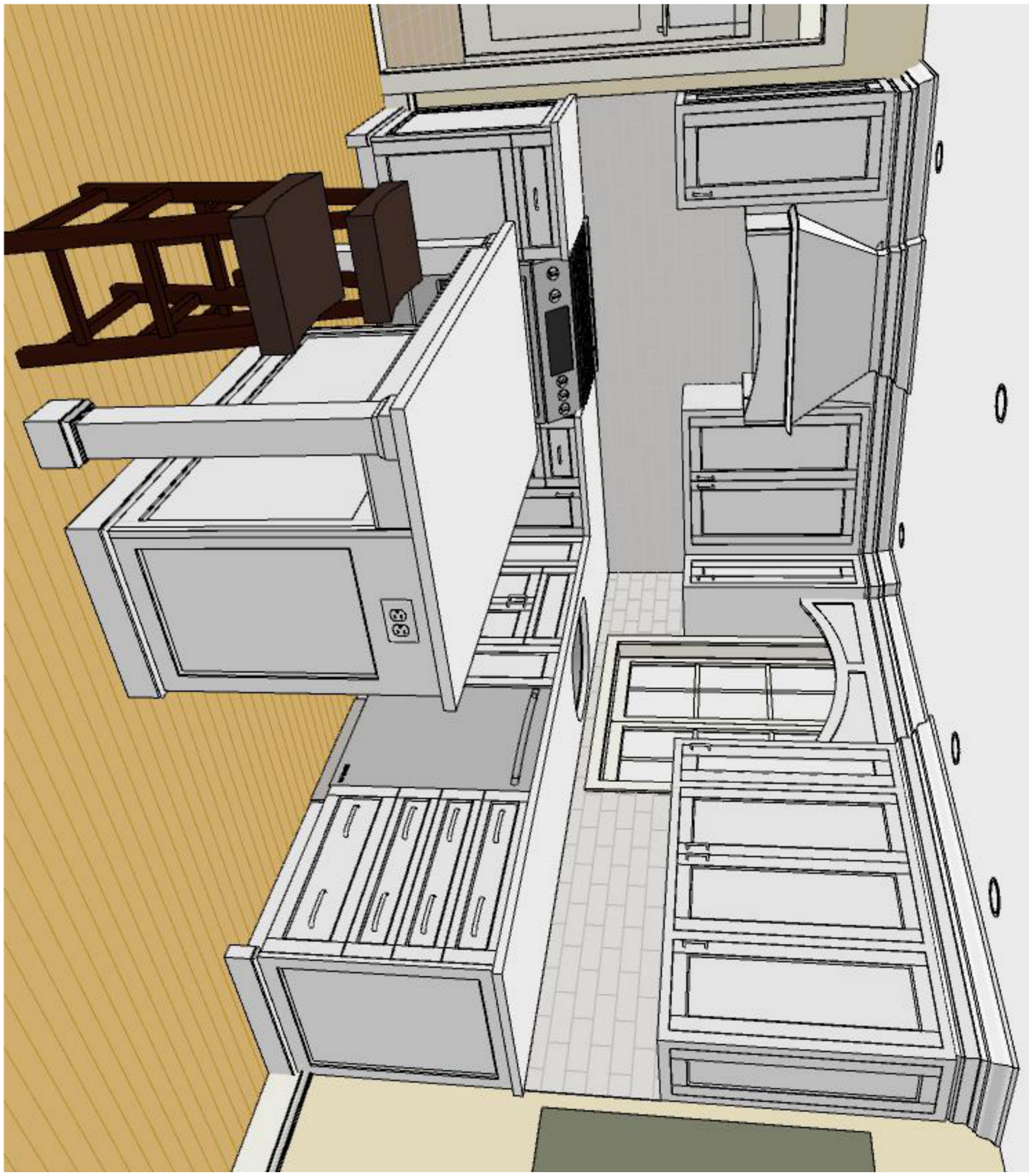

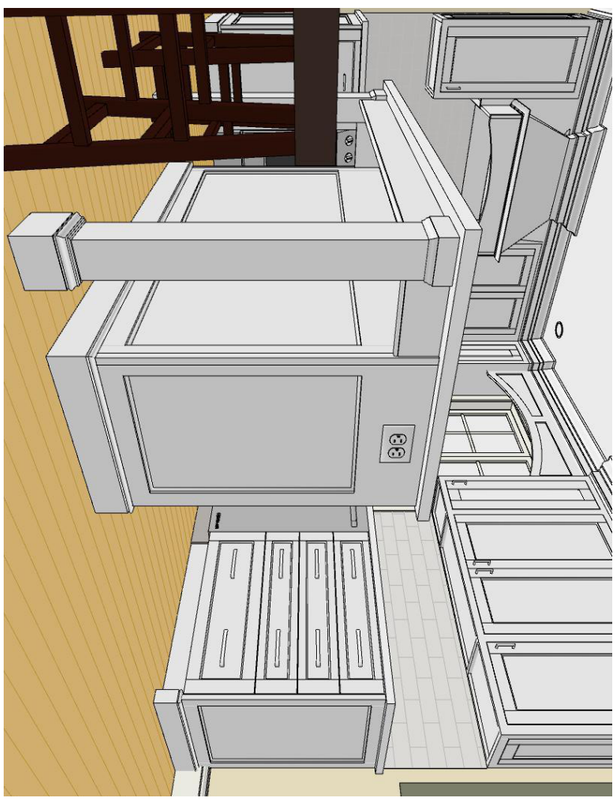

Mark James &Co.

Designers of fine kitchen, baths, and built-ins.

199 Rt. 299, Suite 103,
Highland, NY 12528 (845)834-3047

Perspectives Kitchen	SCALE:	DATE:	K-11
		7/5/2016	

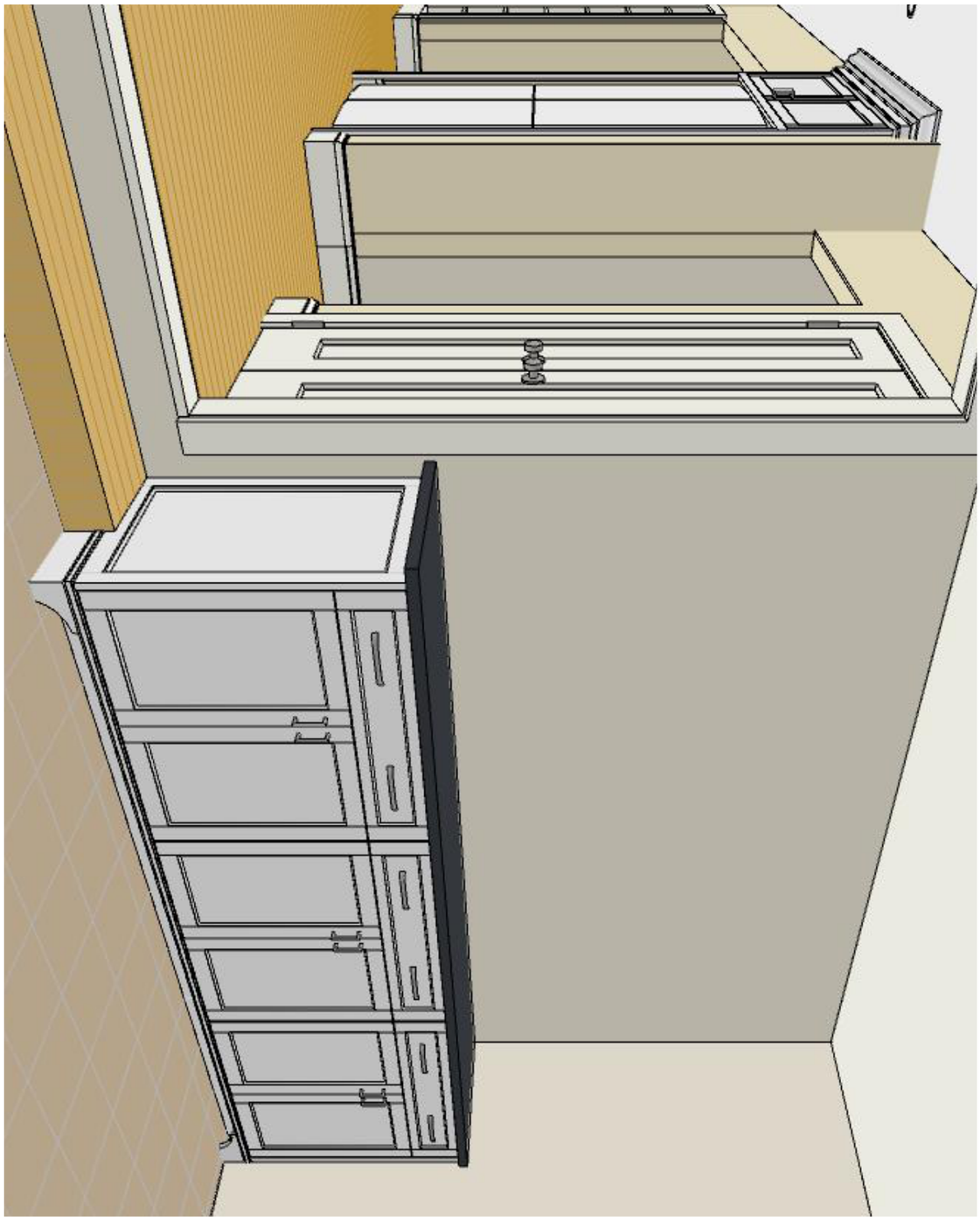

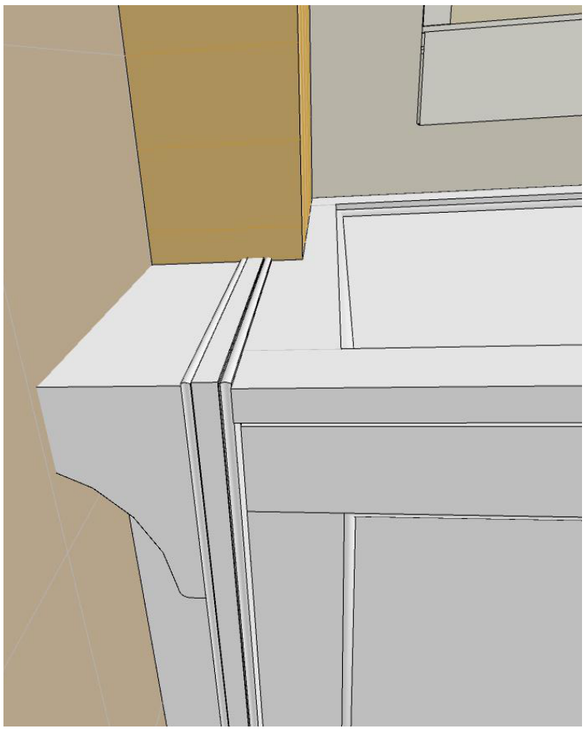

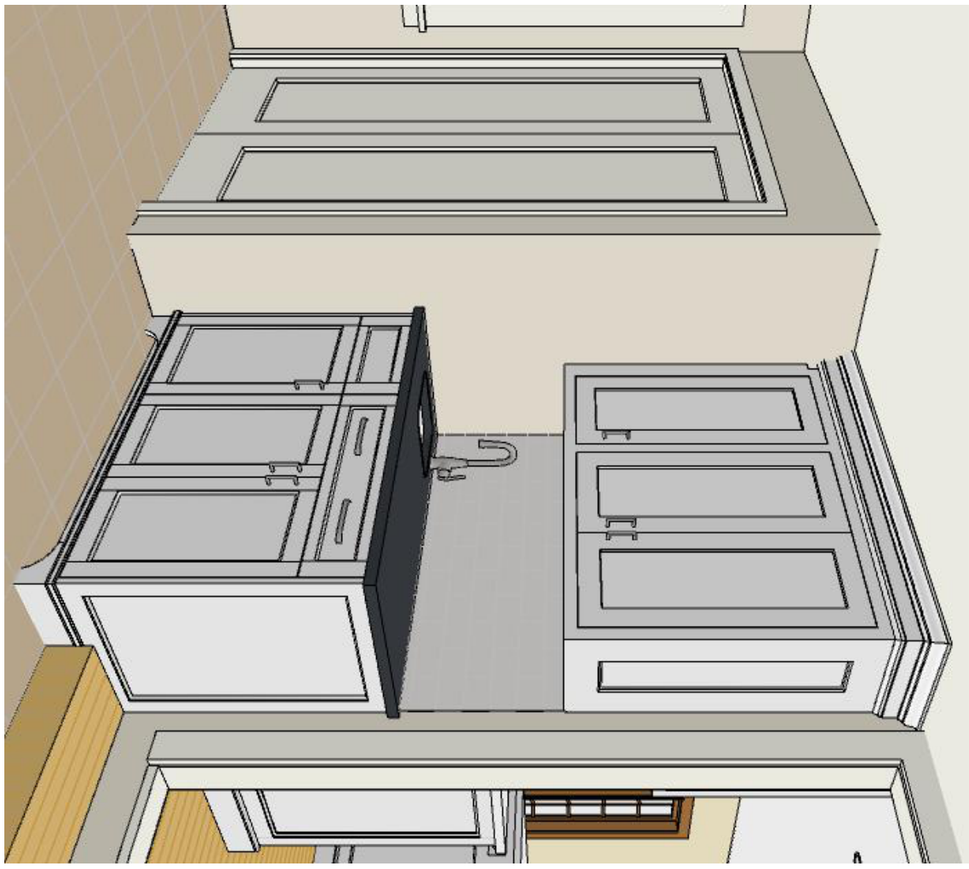

Mark James &Co.

Designers of fine kitchen, baths, and built-ins.

199 Rt. 299, Suite 103,
Highland, NY 12528 (845)834-3047

Perspectives Mud Room

SCALE:	DATE:	
	7/5/2016	K-12

CONSTRUCTION NOTES	
NUMBER	NOTE
NOTE 01	WALL MOVED BACK AS FAR AS POSSIBLE, ADD HEADERS IF NEEDED
NOTE 02	CLIENT REQUESTS CORNER MOLDING ON NEW OPENING-SHOW BEFORE INSTALLING
NOTE 03	ALL NEW CASING TO MATCH 3-1/2" X 1.125" (MATCHES SOME OF EXISTING) CONSIDER OVERLAP AT CORNERS WHERE CASING MEETS!!
NOTE 04	FRIDGE TO BE INSTALLED WITH DOORS FLUSH TO WALL. CHECK ALL DIMENSIONS WITH ACTUAL FRIDGE PRIOR TO FINISHING WALL.
NOTE 05	BUILT IN SHELVING BY CONTRACTOR
NOTE 06	CLIENT SUPPLIED REVERSE OSMOSIS FILTER BELOW SINK, HELD TO RIGHT IN BLIND AREA OF CABINET-ALLOW ACCESS.
NOTE 07	HOOD VENTS OUT-VERTICAL OUTLET 8" ROUND
NOTE 08	NEW SINK AND FAUCET-CONNECT TO EXISTING LAUNDRY DRAIN AND SUPPLY

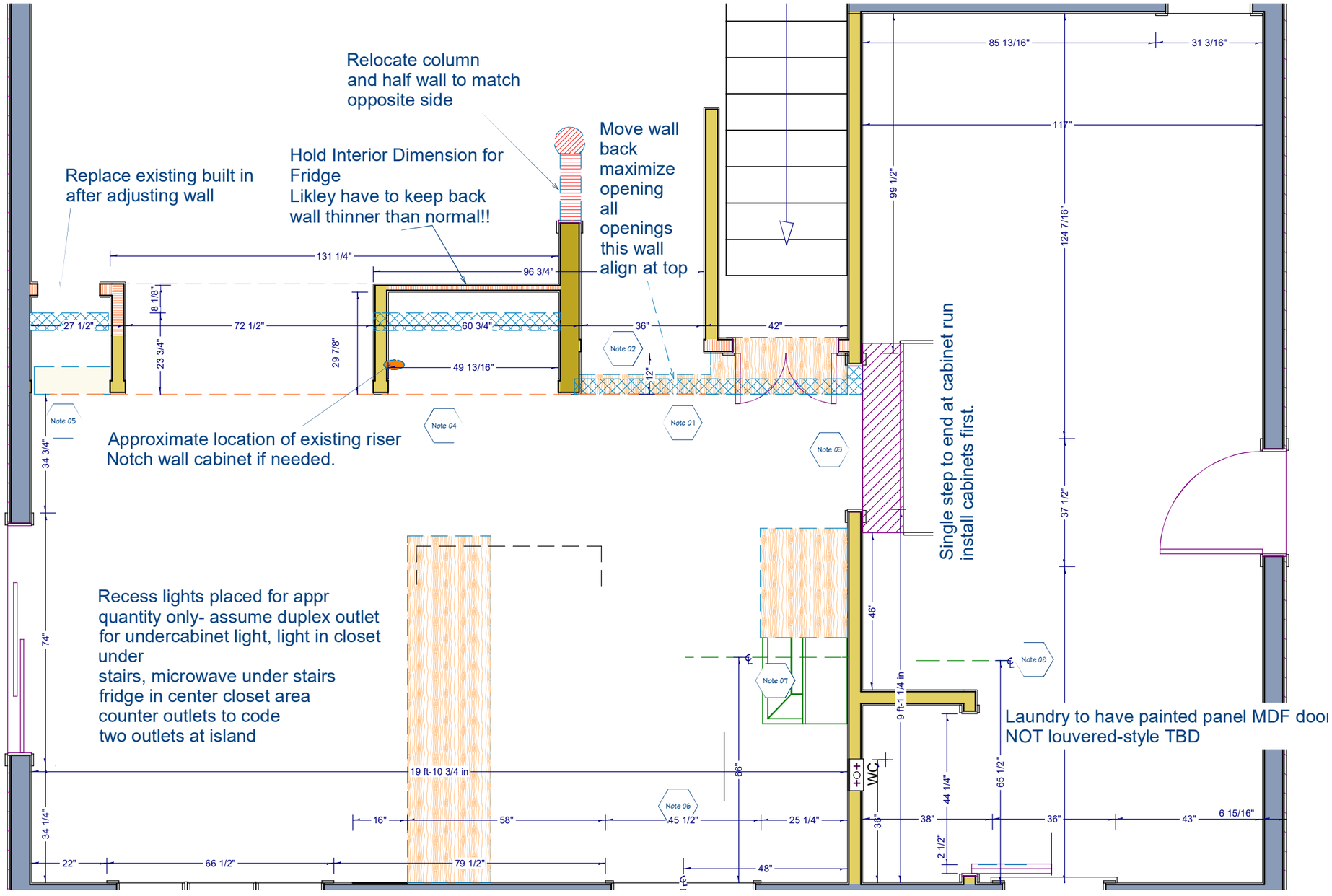

Construction Notes 3/8 in = 1 ft

K-13

DATE: 7/5/2016

SCALE:

Demo & Construction Plan w/Notes

Designers of fine kitchen, baths, and built-ins.
199 Rt. 299, Suite 103,
Highland, NY 12528
(845)834-3047
Mark James &Co.

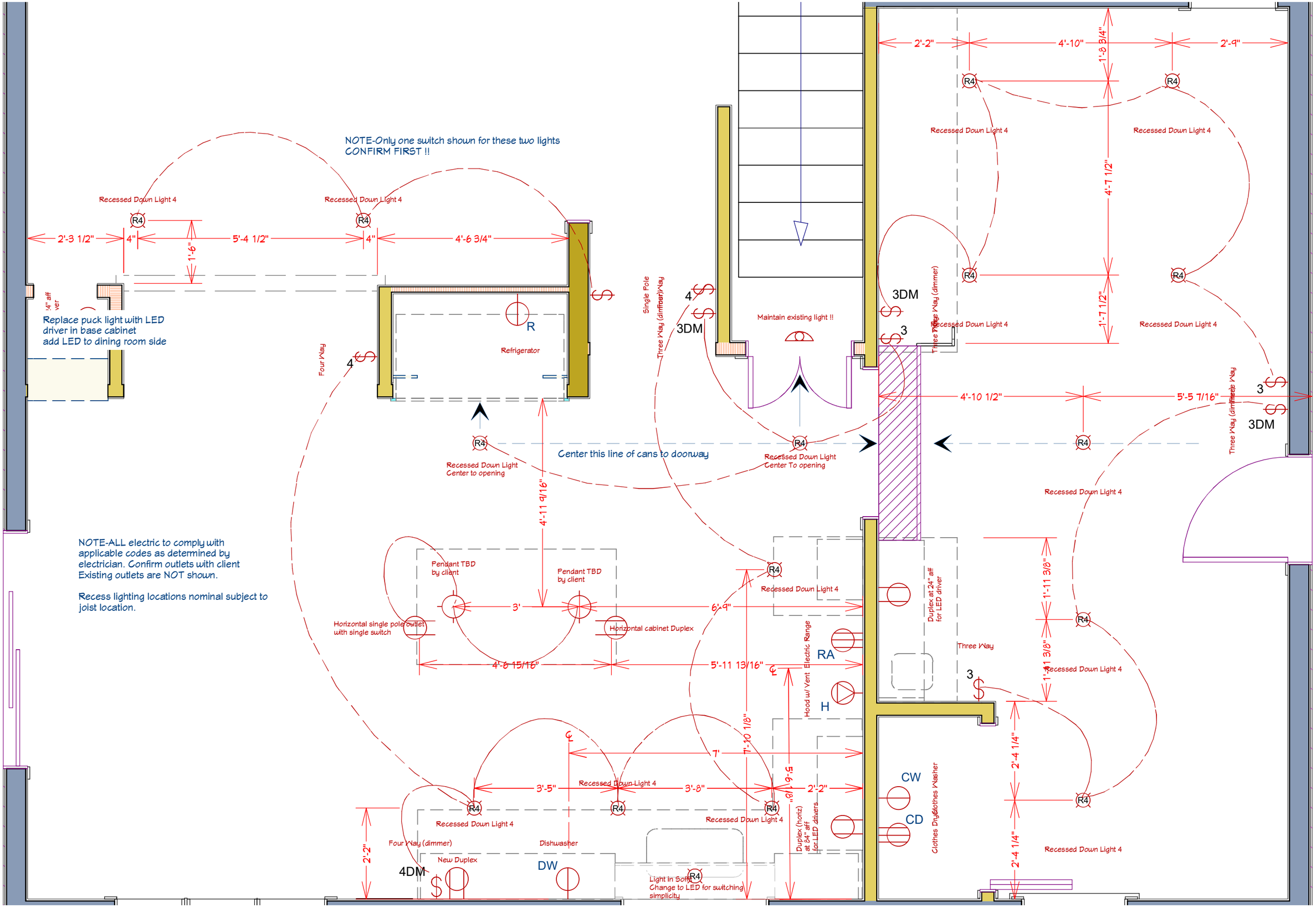

K-14

DATE: 7/7/2016

SCALE:

Electric Plan

Designers of fine kitchen, baths, and built-ins.
199 Rt. 299, Suite 103,
Highland, NY 12528
(845)834-3047
Mark James &Co.

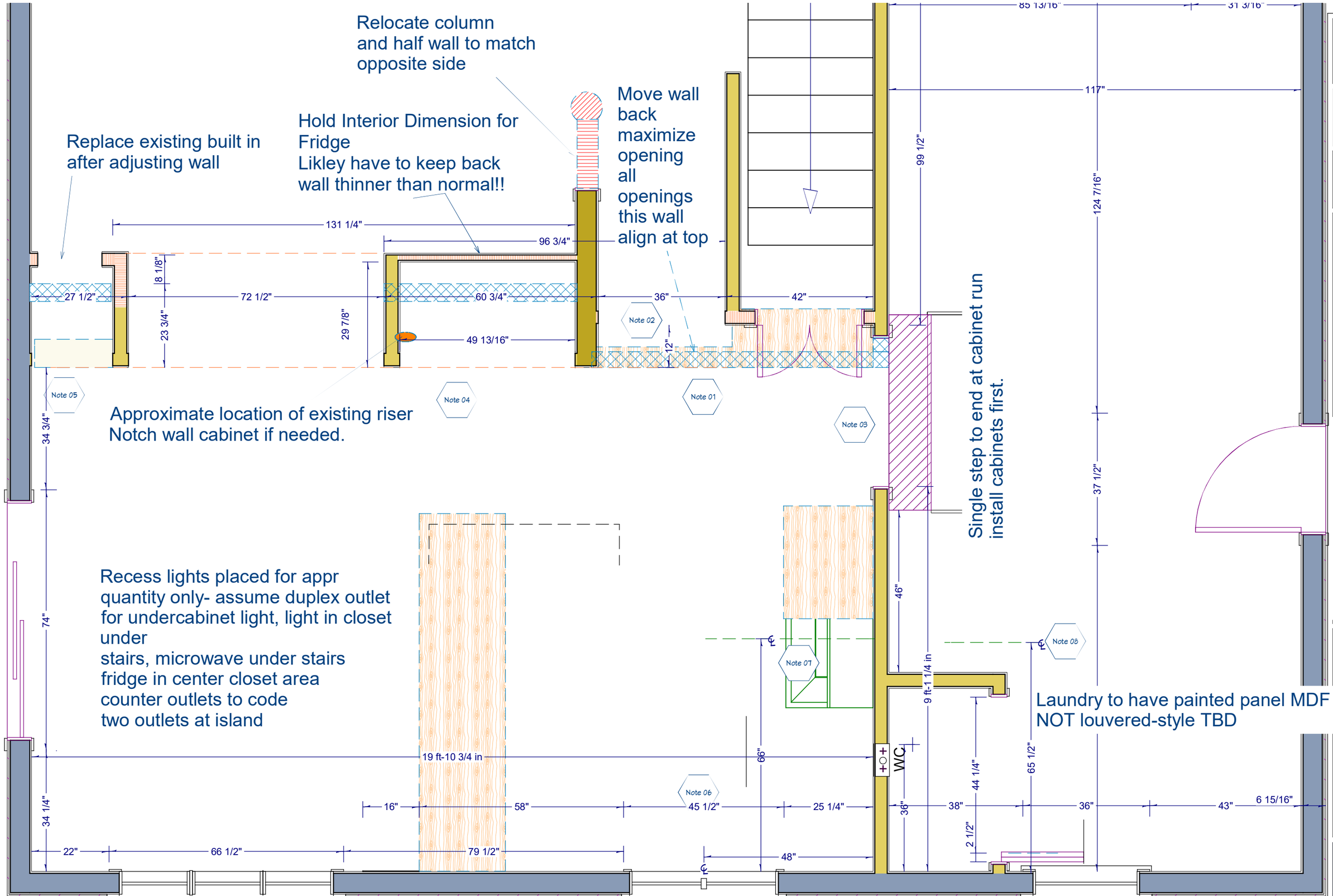

Construction Notes 1/2 in = 1 ft

K-15

DATE: 7/5/2016

SCALE:

Demo and Construction
Dupe-1/2" scale

Designers of fine kitchen, baths, and built-ins.
199 Rt. 299, Suite 103,
Highland, NY 12528
(845)834-3047

Mark James &Co.

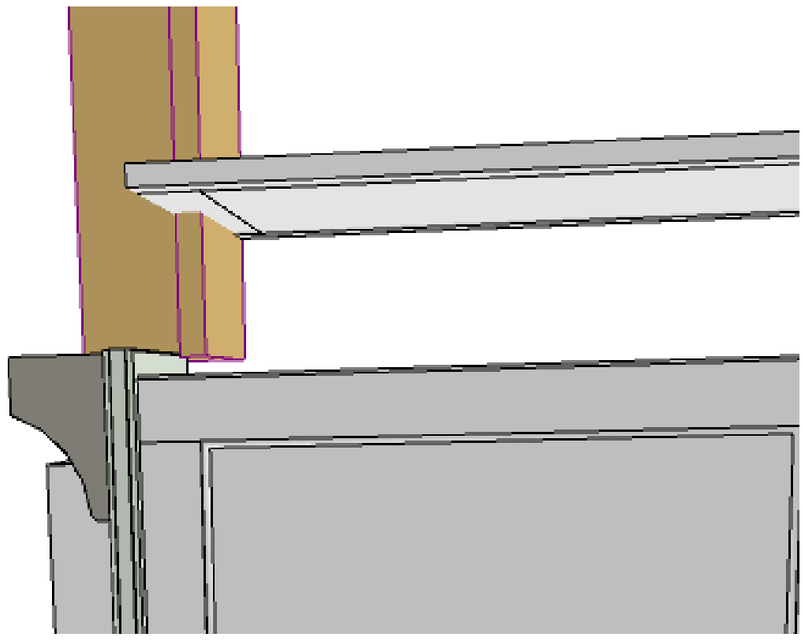

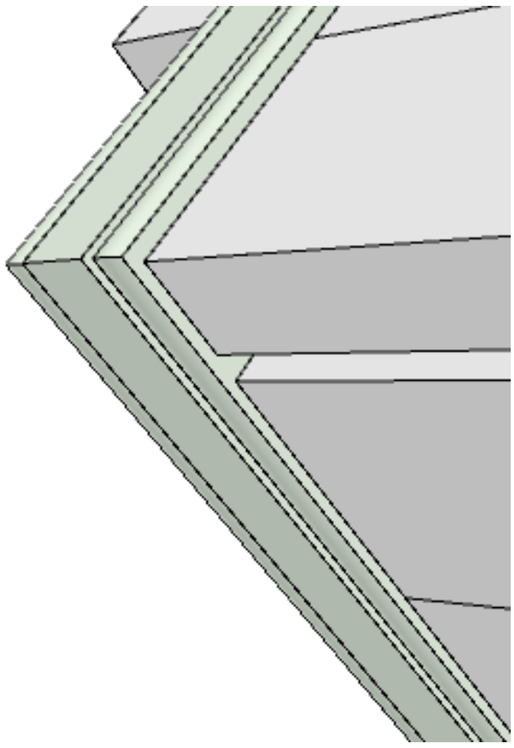

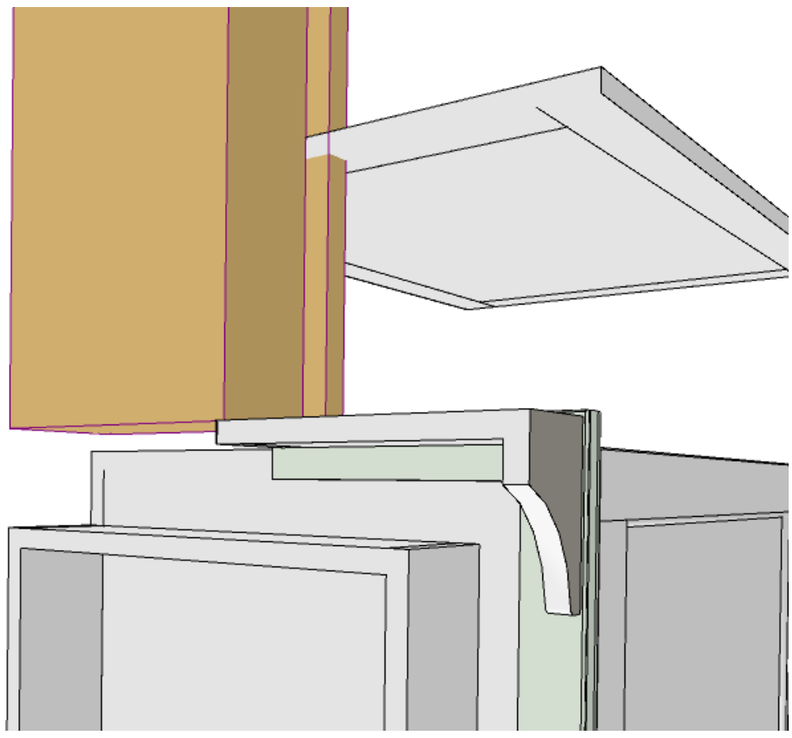

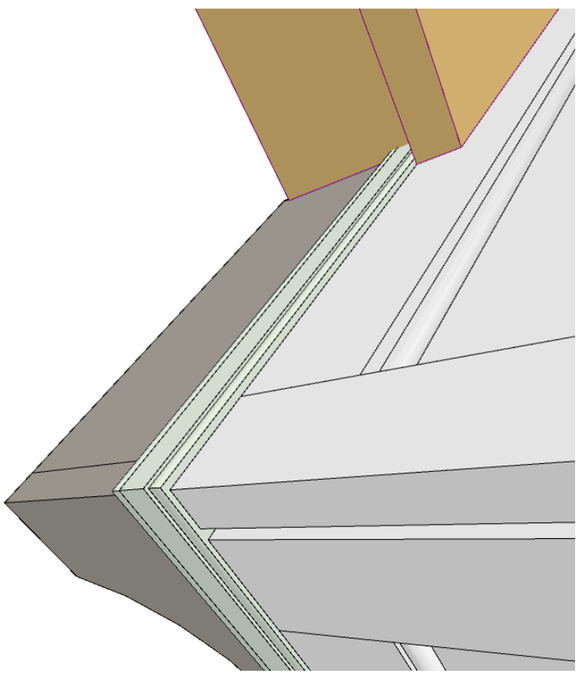

Mark James &Co.

Designers of fine kitchen, baths, and built-ins.

199 Rt. 299, Suite 103,
Highland, NY 12528 (845)834-3047

Dining Room Bracket, Mold, Step Detail

SCALE:	DATE:
	7/5/2016

K-16

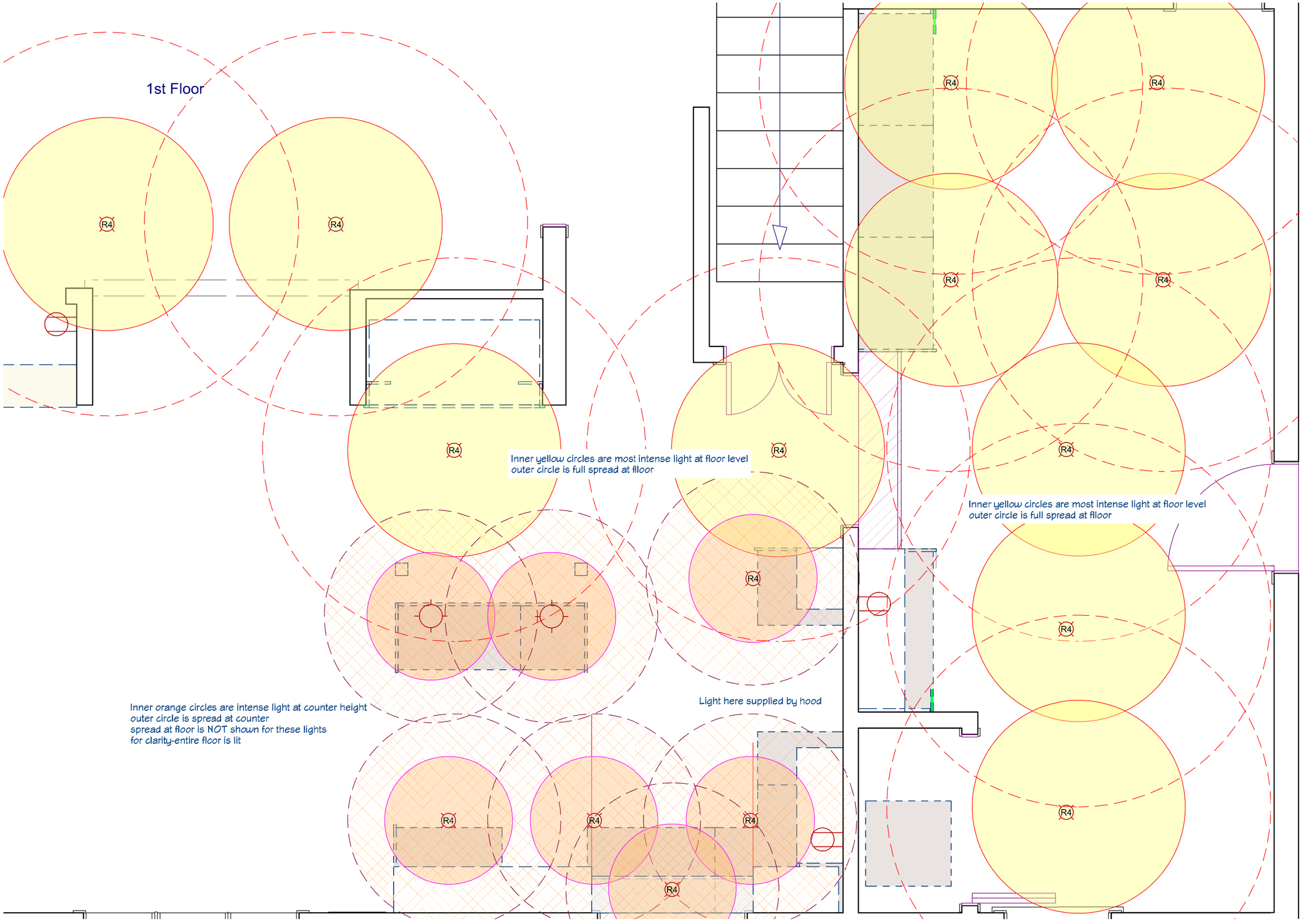

K-17

DATE: 7/7/2016

SCALE:

Light Spread

Designers of fine kitchen, baths, and built-ins.
199 Rt. 299, Suite 103,
Highland, NY 12528
(845)834-3047

Mark James &Co.

NOTE re switching of LED-There are issues dimming a run of LEDs from multiple locations.
<u>It is strongly suggested that a single location be selected to control each run-in cabinet, undercabinet in the kitchen and in cabinet and undercabinet in the mud room.</u>
The only possible method for dimming and having multiple switch locations would be dimming by a remote and having other switches for on/off HOWEVER it is not clear at this time if that is even possible.
The alternative is complicated in wall hard wired system- expensive, to be avoided.
Please advise.

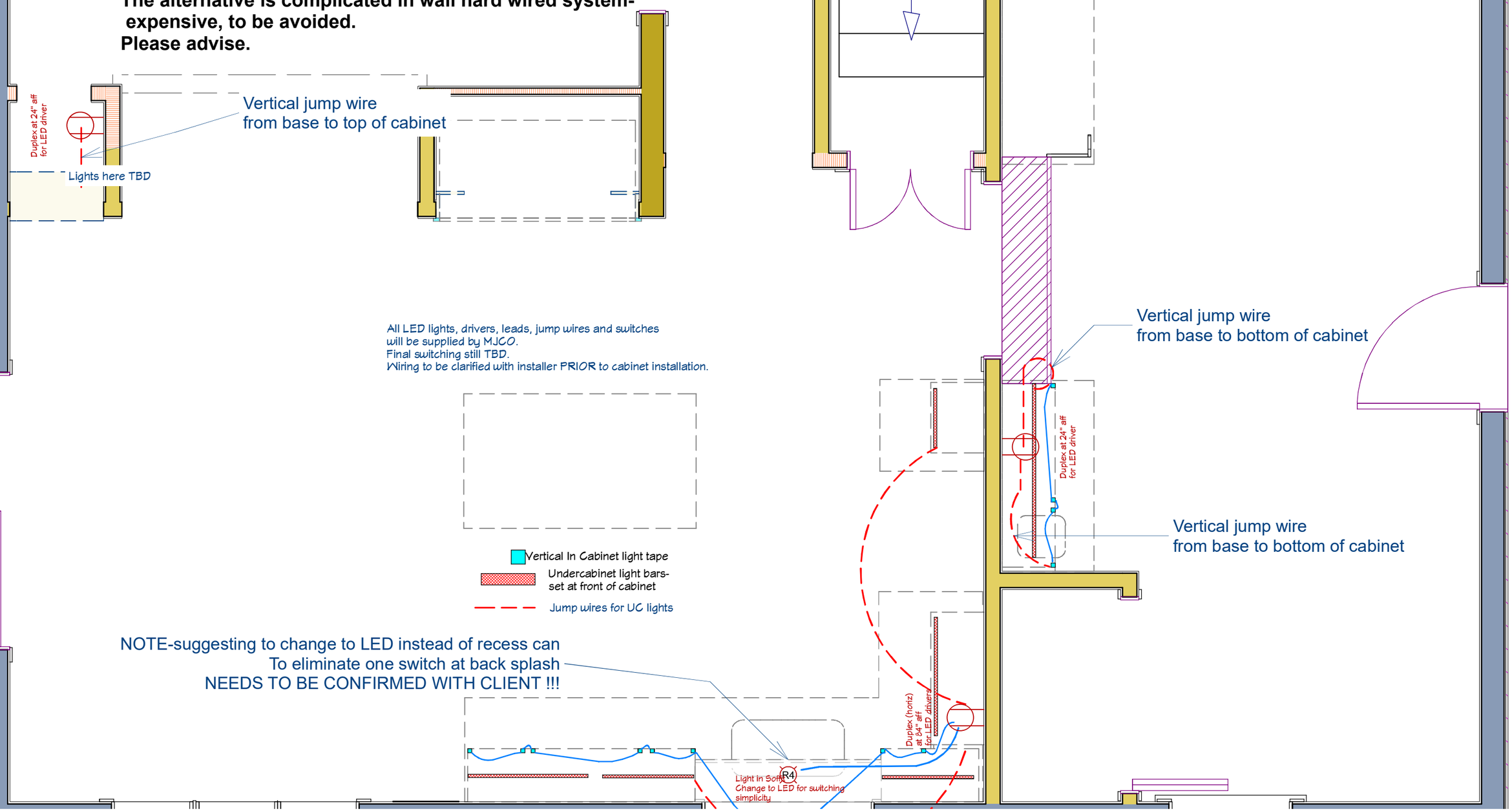

K-18

DATE: 7/7/2016

SCALE:

LED -in & under cabinet

Designers of fine kitchen, baths, and built-ins.
199 Rt. 299, Suite 103,
Highland, NY 12528
(845)834-3047
Mark James &Co.